Service Manual

SA-5760A

SA-5760A (FEE)

For additional information, please refer to the service manual for Model No. SA-5760 (X/XGH)

Notes:
* This service manual includes only the changes of the **SA-5760 (X/XGH)** service manual (ORDER NO. SD7608-1122).
* When servicing model **SA-5760A (FEE)**, this service manual and **SA-5760 (X/XGH)** (ORDER NO. SD7608-1122) service manual should be used together.

CHANGES

■ REPLACEMENT PARTS LIST

Important Safety Notice
Components identified by shaded area have special characteristics important for safety. When replacing any of these components use only manufacture's specified parts.

Ref. No.	Change of Part No.		Description	Per Set (Pcs.)		Remarks
	SA-5760 (X/XGH)	**➡SA-5760A (FEE)**				
R173	**ERD25TJ332**	**ERD25TJ392**	3.9kΩ, 1/4W, ±5%, Carbon	1		
R174	**ERD25TJ332**	**ERD25TJ392**	3.9kΩ, 1/4W, ±5%, Carbon	1		
C163	ECQM05183JZ	ECQM05273JZ	0.027μF, 50WV, ±5%, Polyester	1		
C164	ECQM05183JZ	ECQM05273JZ	0.027μF, 50WV, ±5%, Polyester	1		
	SSM77	SSM85	Meter, Signal	1		
	SSM79	SSM87	Meter, Tuning	1		
37	SDH329-1	SDH329-2	Plate, Dial Light & Meter M'tg	1		○
42	SHRA916-1	SHRA916-2	Clip, Dial Scale M'tgq	2		
43	SKD2610	SKD2910	Scale, Dial	1		○
47	SDP1099	SDP1099-1	Pointer, Dial	1		○
57	SGP9017	Deletion	Cover Plate, AC Outlet Hole	0		
57-1	Addition	SJSA66-1	AC Outlet	2		
	Addition	SGT12411	Name Plate	1		○
68	SKA8290W	SKA8291W	Cabinet (Black)	1		○
P3	SPS541	SPS523	Pad, Left & Right Side	2		
P6[X] P6[XGH]	SPG767 SPG765	SPG767	Carton box, Inner	1		○
P7[X] P7[XGH]	SPG763 SPG857	SPG859-1	Carton box, Outer	1		○

Technics

Matsushita Electric Trading Co., Ltd.
P.O. Box 288, Central Osaka Japan

Ref. No.	Change of Part No.		Description	Per Set (Pcs.)		Remarks
	SA-5760 (X/XGH) ➡ SA-5760A (FEE)					
P8	SQF1365	SQF1369	Printed matter	1		
P9[X] P9[XGH]	SPS691 SPS693	SPS693	Pad, Carton box	2		
P10[X] P10[XGH]	SPS543 SPS547	SPS547	Pad, Bottom Side	1		
P11	SPS545	Deletion	Pad, Top Side	0		
	Addition	SPS807	Pad, Inner Side	1		

Notes: Set for〔FEE〕are European Audio Clud.

ORDER NO. SD7608-1122

Service Manual

FM/AM STEREO RECEIVER

SA-5760

(X),(XGH)

Cabinet color differs according to area.

TECHNICAL SPECIFICATIONS

Specifications are subject to change without notice for further improvement.

AMPLIFIER SECTION (IHF)

1 kHz continuous power output		230W + 230W (4Ω)
both channels driven		175W + 175W (8Ω)
20 Hz ~ 20 kHz continuous power output		205W + 205W (4Ω)
both channels driven		165W + 165W (8Ω)
Total harmonic distortion		0.08% at rated power (20 Hz ~ 20 kHz)
		0.015% at half power (1 kHz)
Intermodulation distortion		0.1%
Damping factor		60 (8Ω), 30 (4Ω)
Input sensitivity and impedance		
PHONO 1, 2		2.5mV/25,50, 100 kΩ
AUX TAPE 2 PLAYBACK		200mV/50 kΩ
TAPE 1 PLAYBACK, REC/PLAY input		230mV/60 kΩ
PHONO maximum input voltage (1 kHz, RMS)		250mV
S/N (IHF, A)	PHONO 1, 2	78 dB
	AUX	95 dB
Frequency response		
PHONO 1, 2	RIAA standard curve	±0.2 dB
AUX	20 Hz ~ 20 kHz,	+0 dB, −0.3 dB
Tone controls	BASS	50 Hz +12 dB ~ −12 dB
	TREBLE	10 kHz, +10 dB ~ −10 dB
Turnover frequency	BASS	250 Hz, 500 Hz
	TREBLE	2.5 kHz, 5 kHz
Loudness control (volume at −30 dB)		50 Hz, +10 dB
High filter		7 kHz, −12 dB/oct.
Low filter		30 Hz, −12 dB/oct.
Muting		−20 dB
Output voltage	TAPE 1 REC OUT	230mV
	TAPE 2 REC OUT	200mV
	TAPE 1 REC/PLAY output	30mV
Load impedance	MAIN or REMOTE	4 ~ 16Ω
	MAIN + REMOTE	8 ~ 16Ω

(DIN 45 500)

1 kHz continuous power output	2 x 230W (4Ω)
both channels driven	2 x 175W (8Ω)
20 Hz ~ 20 kHz continuous power output	2 x 205W (4Ω)
both channels driven	2 x 165W (8Ω)
Power bandwidth	
both channels driven at 4 Ω	5 Hz ~ 40 kHz, −3 dB
Total harmonic distortion	
rated power at 40 Hz ~ 16 000 Hz, 4 Ω	0.08%
Intermodulation distortion	
rated power at 250 Hz : 8000 Hz = 4 : 1, 4 Ω	0.1%
Frequency response	20 Hz ~ 20 kHz, +0 dB, −0.3 dB
S/N rated power PHONO 1, 2	65 dB
AUX	85 dB
50 mW power output PHONO 1, 2	52 dB
AUX	52 dB

FM TUNER SECTION (IHF)

Frequency range				88 ~ 108 MHz
Antenna terminals				300Ω (balanced), 75Ω (unbalanced)
Sensitivity				1.8μV
Total harmonic distortion	MONO	0.1%	STEREO	0.15%
S/N (HI-LAG)	MONO	85 dB	STEREO	75 dB
Frequency response				
CONST	20 Hz ~ 18 kHz,			+0.2 dB, −0.8 dB
HI-LAG	20 Hz ~ 15 kHz,			+0.2 dB, −0.8 dB
Alternate channel selectivity				80 dB
Capture ratio				1.0 dB
Image rejection at 98 MHz				85 dB
IF rejection at 98 MHz				100 dB
Spurious response rejection at 98 MHz				100 dB
AM suppression				60 dB
Stereo separation	1 kHz,	45 dB	10 kHz,	38 dB
Leak carrier (HI-LAG)				−65 dB

(DIN 45 500)

Sensitivity				1.7μV, S/N 30 dB, 300Ω
				1.3μV, S/N 20 dB, 300Ω
				1.2μV, S/N 30 dB, 75Ω
				0.9μV, S/N 20 dB, 75Ω
Total harmonic distortion	MONO	0.1%	STEREO	0.15%
S/N	MONO	58 dB	STEREO	55 dB
Leak carrier (HI-LAG)	19 kHz	−65 dB	38 kHz	−75 dB
Limiting point				1.0μV
Band width	IF amplifier			250 kHz
	FM demodulator			1000 kHz

AM TUNER SECTION

Frequency range	525 ~ 1605 kHz
Sensitivity	30μV, 250μV/m
Selectivity	22 dB
Image rejection at 1000 kHz	47 dB
IF rejection at 1000 kHz	40 dB

GENERAL

Power consumption	1100W
Power supply	110/120/220/240V
Dimensions (W x H x D)	550 x 175 x 493 mm (21 21/32" x 6 7/8" x 19 13/32")
Weight	23 kg (50.7 lb.)

Technics

Matsushita Electric Trading Co., Ltd.
P.O. Box 288, Central Osaka Japan

■ LOCATION OF CONTROLS

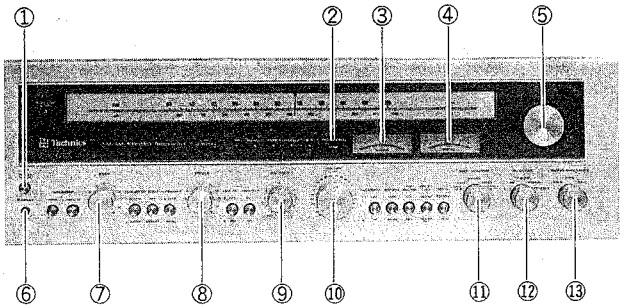

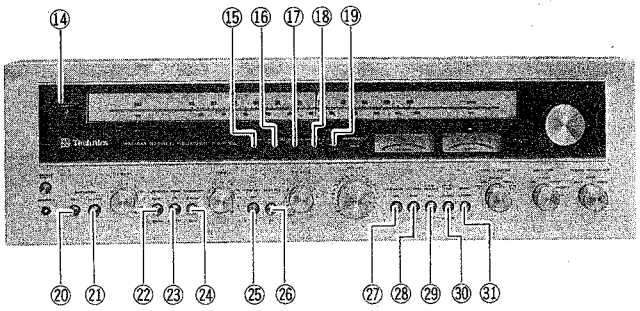

① POWER SWITCH
② FM STEREO INDICATOR
③ FM CENTER-TUNING METER
④ FM/AM SIGNAL STRENGTH METER
⑤ TUNING CONTROL
⑥ HEADPHONES JACK
⑦ BASS CONTROL
⑧ TREBLE CONTROL
⑨ BALANCE CONTROL
⑩ VOLUME CONTROL
⑪ TAPE MONITOR SELECTOR SWITCH
⑫ INPUT SELECTOR SWITCH
⑬ PHONO IMPEDANCE SWITCH
⑭ OVER LOAD ALARM INDICATOR
⑮ AM FUNCTION INDICATOR
⑯ FM AUTO FUNCTION INDICATOR
⑰ PHONO 1 FUNCTION INDICATOR
⑱ PHONO 2 FUNCTION INDICATOR
⑲ AUX FUNCTION INDICATOR
⑳ MAIN SPEAKER SWITCH
㉑ REMOTE SPEAKER SWITCH
㉒ TURNOVER(BASS) SWITCH
㉓ TONE DEFEAT SWITCH
㉔ TURNOVER(TREBLE) SWITCH
㉕ LOW FILTER SWITCH
㉖ HIGH FILTER SWITCH
㉗ LOUDNESS SWITCH
㉘ AUDIO MUTING SWITCH
㉙ FM MUTING SWITCH
㉚ DELAY TIME SWITCH
㉛ MODE SWITCH

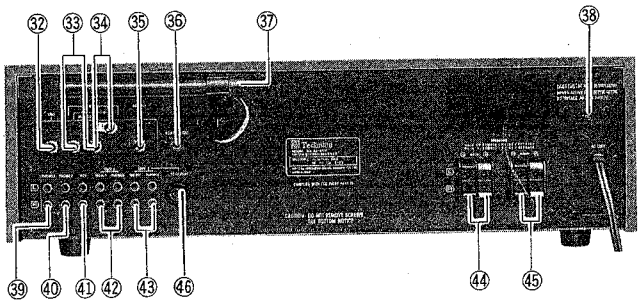

㉜ GROUND TERMINAL
㉝ 300Ω FM ANTENNA TERMINALS
㉞ 75Ω FM ANTENNA TERMINALS
㉟ AM ANTENNA TERMINAL
㊱ FM 4CHANNEL MPX OUTPUT TERMINAL
㊲ AM ANTENNA COIL
㊳ VOLTAGE SELECTOR SWITCH
㊴ PHONO 1 INPUT TERMINALS
㊵ PHONO 2 INPUT TERMINALS
㊶ AUX INPUT TERMINALS
㊷ TAPE DECK 2 CONNECTION TERMINALS
㊸ TAPE DECK 1 CONNECTION TERMINALS
㊹ MAIN SPEAKER TERMINALS
㊺ REMOTE SPEAKER TERMINALS
㊻ TAPE DECK 1 (DIN) CONNECTION SOCKET

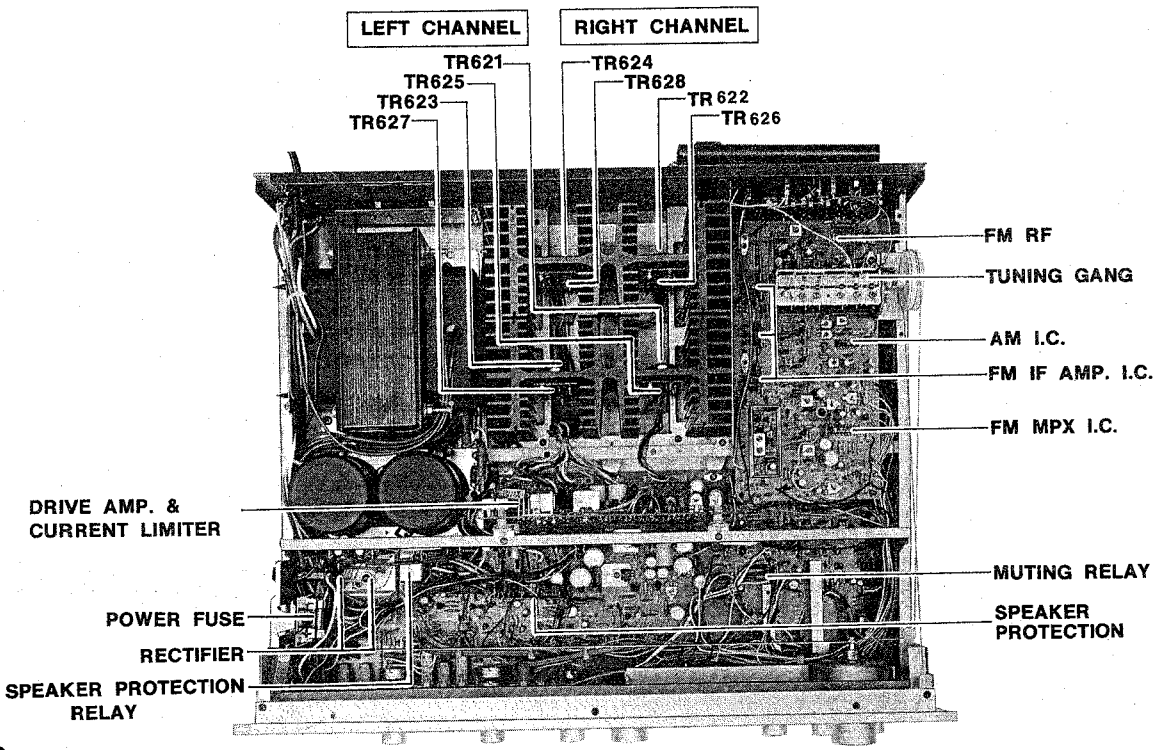

■ DIAL LIGHT & POWER SUPPLY OF FUNCTION INDICATOR CIRCUIT BOARD

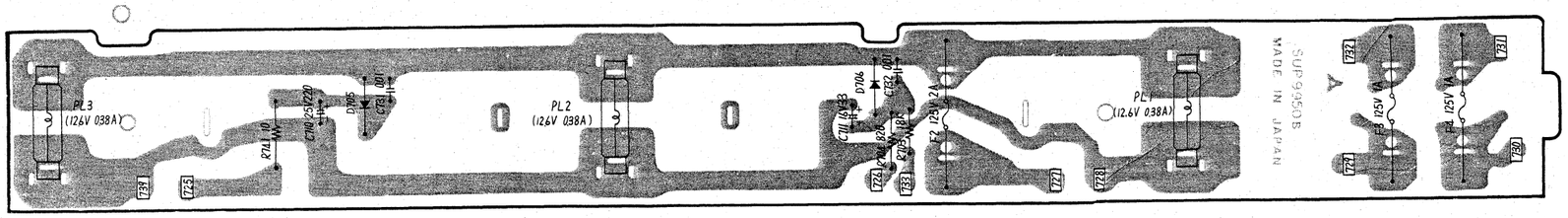

■ POWER SUPPLY OF POWER AMPLIFIER & SPEAKERS SWITCH CIRCUIT BOARD

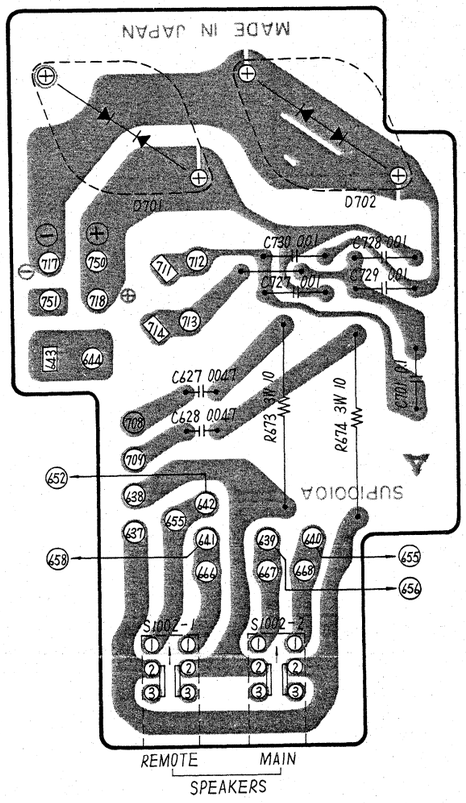

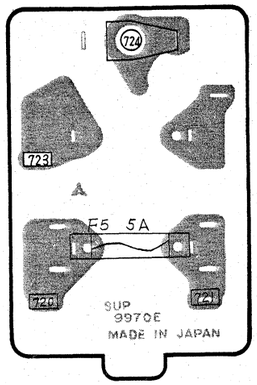

■ OVERLOAD ALARM INDICATOR CIRCUIT BOARD

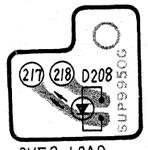

■ POWER AMPLIFIER CIRCUIT BOARDS

● Left Channel Amplifier

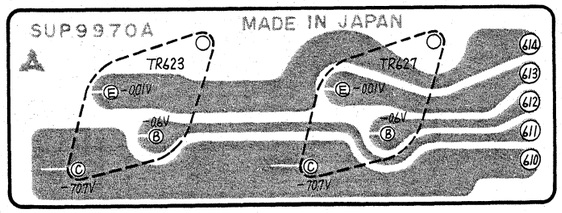

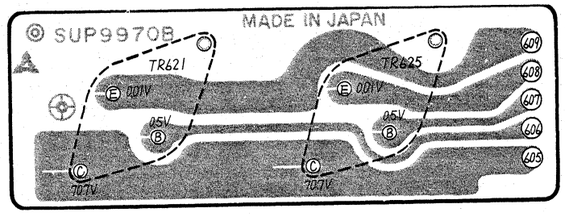

● Right Channel Amplifier

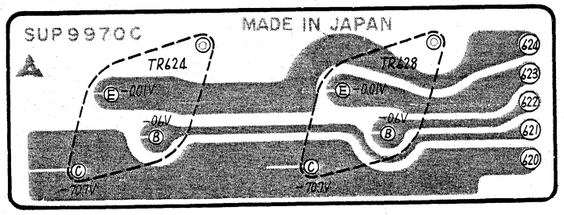

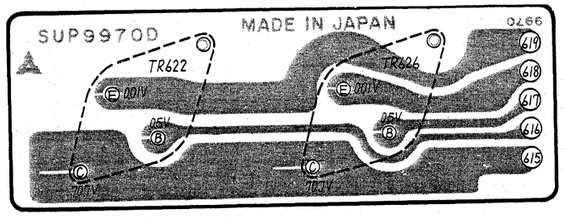

■ POWER AMPLIFIER THERMAL COMPENSATION CIRCUIT BOARD

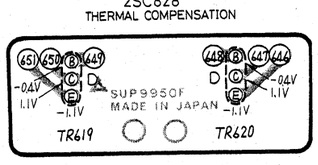

■ SPEAKERS TERMINAL CIRCUIT BOARD

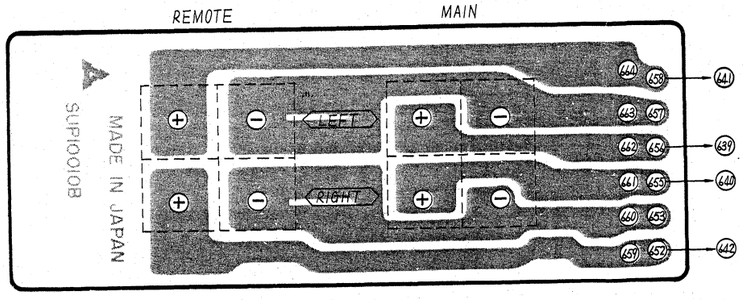

■ FUNCTION INDICATOR CIRCUIT BOARD

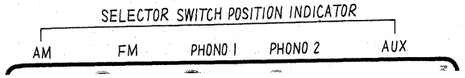

■ BLOCK DIAGRAM

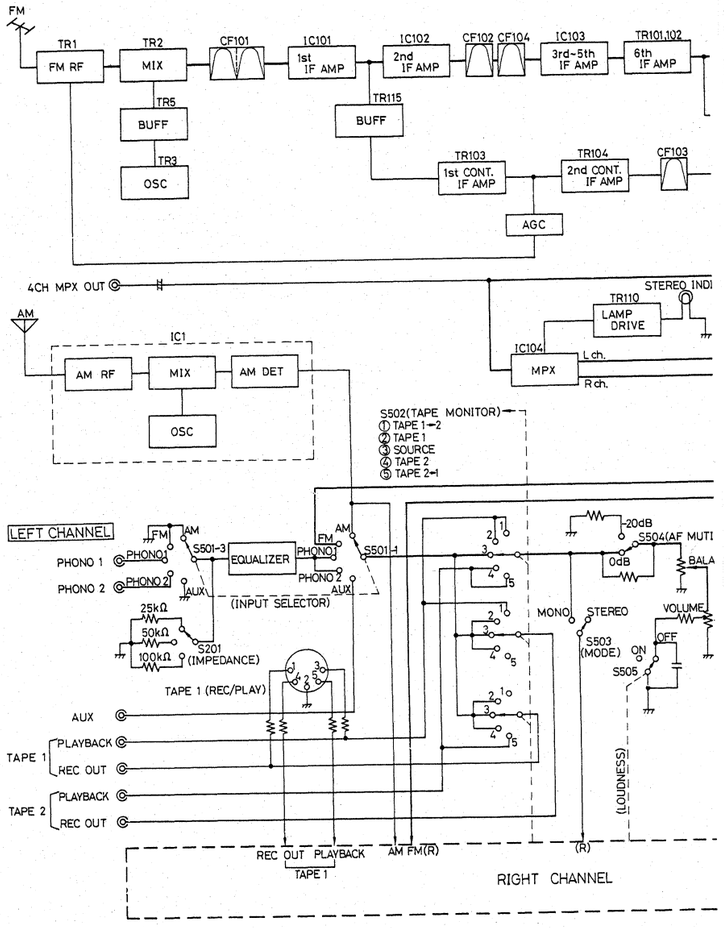

● IC104(SVIHA1156) FM Multiplex Circuit

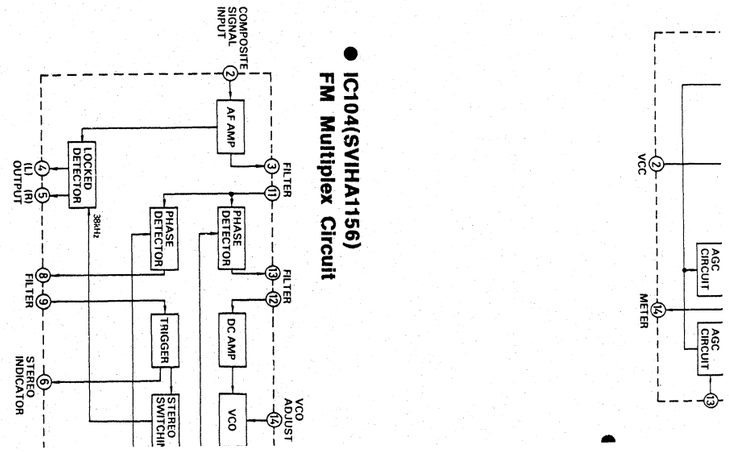

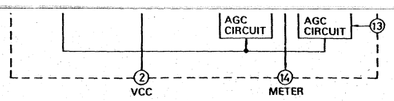

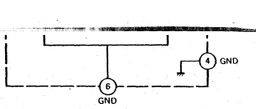

● **IC103(SVIAUPC577) FM IF 3 steps Amplifier Circuit**

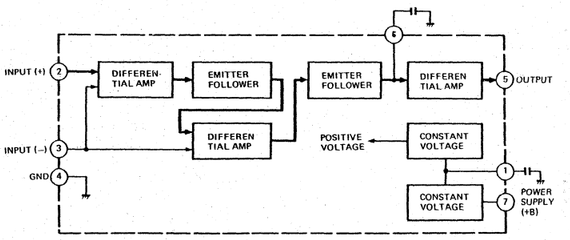

● **IC104(SVIHA1156)**
FM Multiplex Circuit

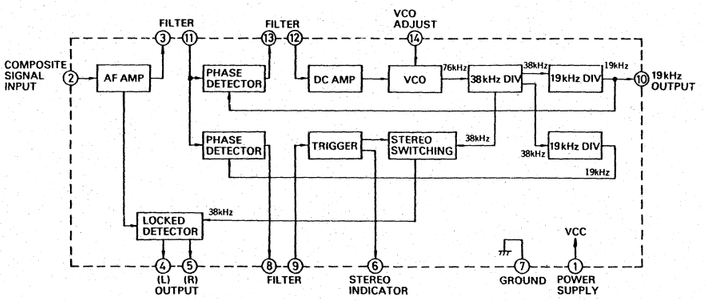

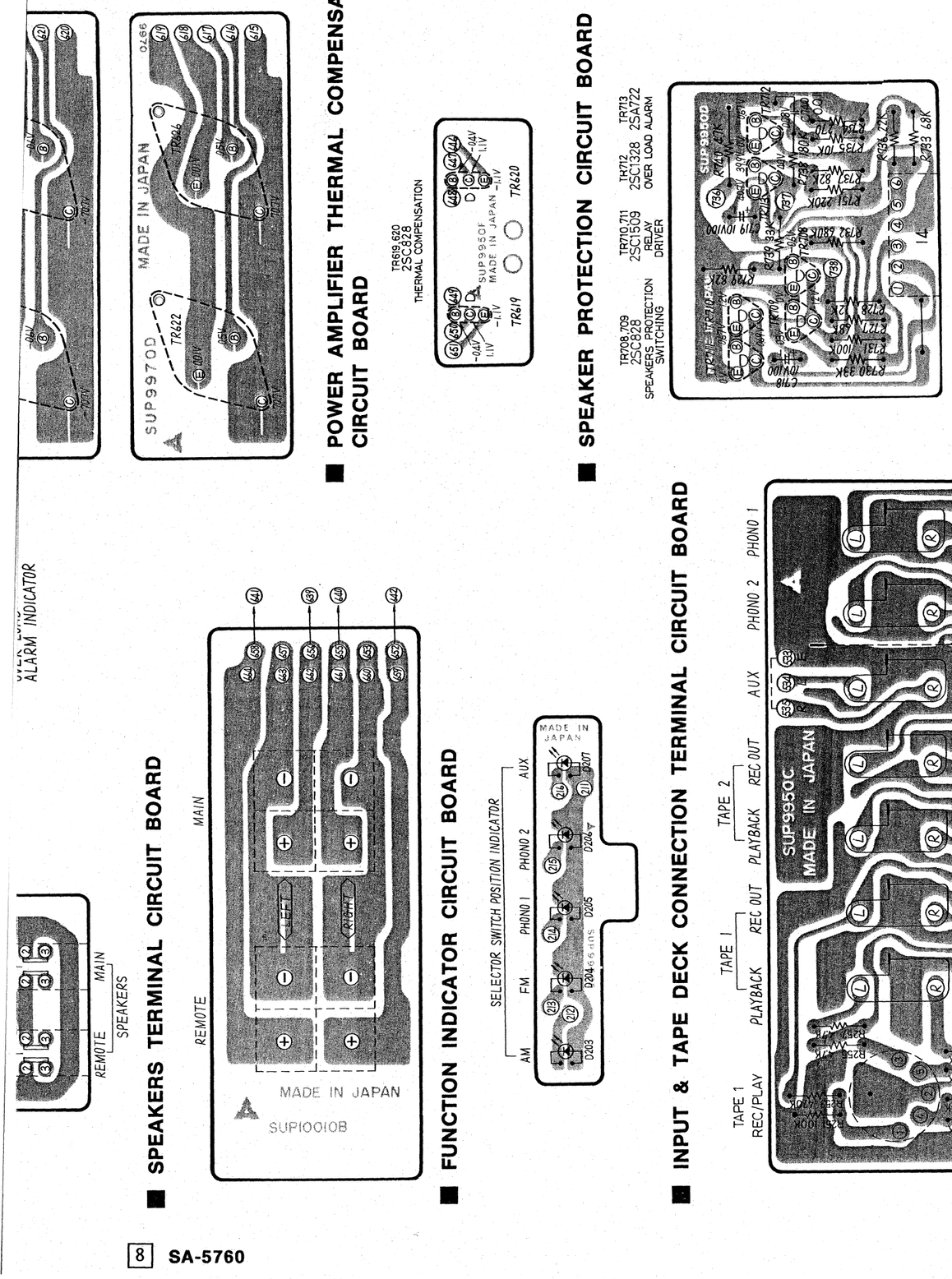

■ **SPEAKERS TERMINAL CIRCUIT BOARD**

■ **FUNCTION INDICATOR CIRCUIT BOARD**

■ **INPUT & TAPE DECK CONNECTION TERMINAL CIRCUIT BOARD**

■ **POWER AMPLIFIER THERMAL COMPENSATION CIRCUIT BOARD**

■ **SPEAKER PROTECTION CIRCUIT BOARD**

■ BLOCK DIAGRAM

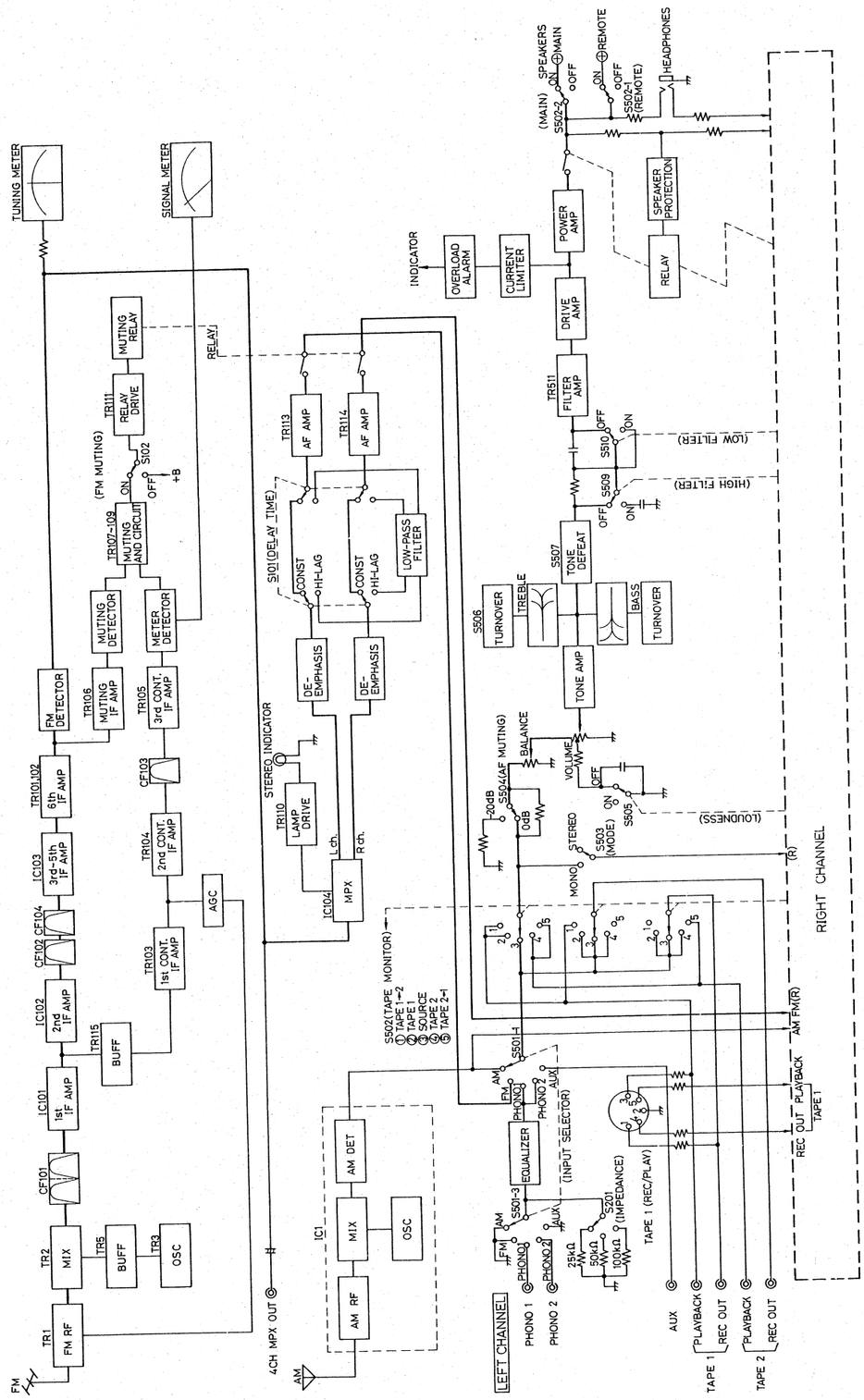

5 SA-5760

■ DIAL CORD INSTALLATION GU

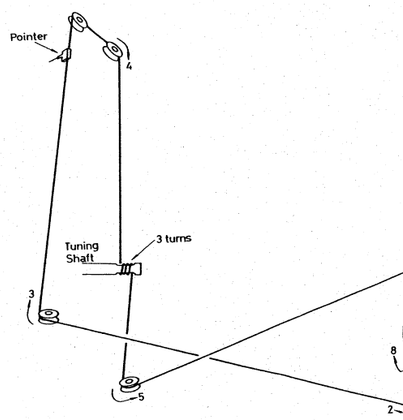

■ BLOCK DIAGRAM OF INTEGRA

● IC 1 (SVIHA1151)
AM RF, IF Amplifier & Detector

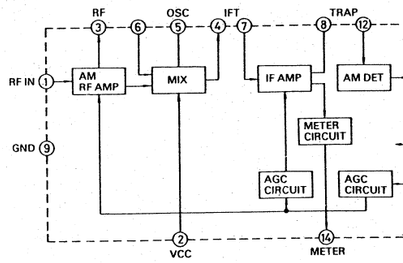

● IC104(SVIHA1156)
FM Multiplex Circuit

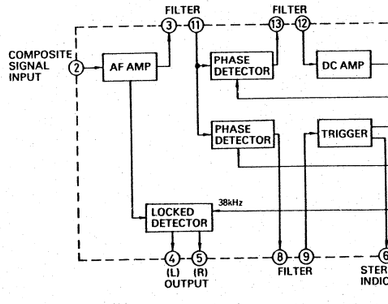

6 SA-5760

■ POWER AMPLIFIER CIRCUIT BOARDS

● Left Channel Amplifier

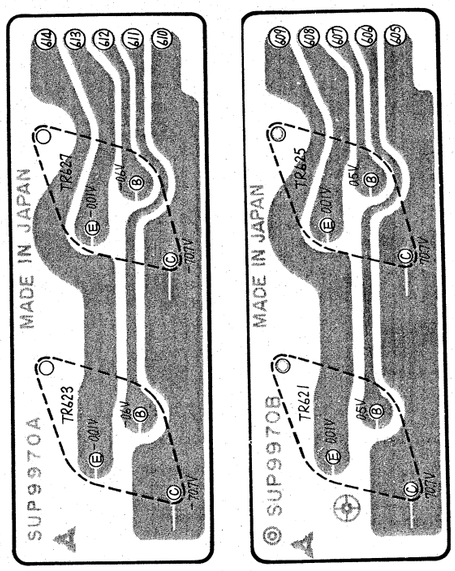

● Right Channel Amplifier

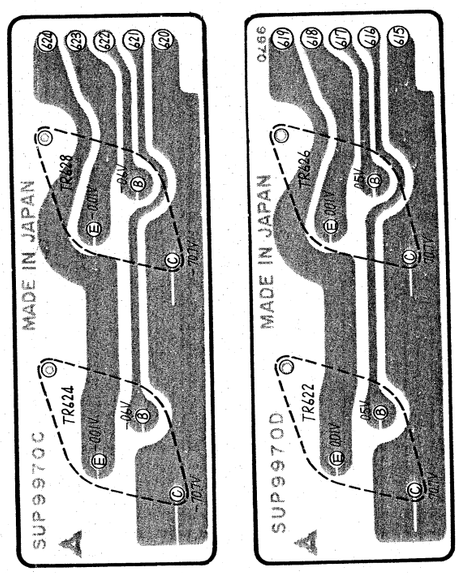

■ POWER AMPLIFIER THERMAL COMPENSATION CIRCUIT BOARD

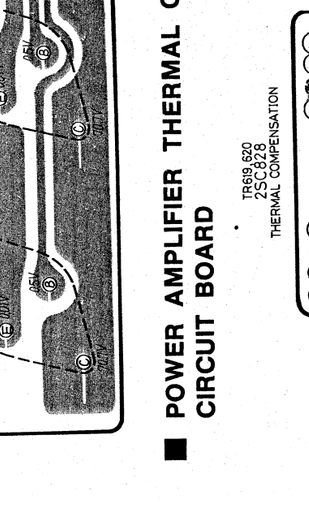

■ POWER AMPLIFIER CIRCUIT BOARD

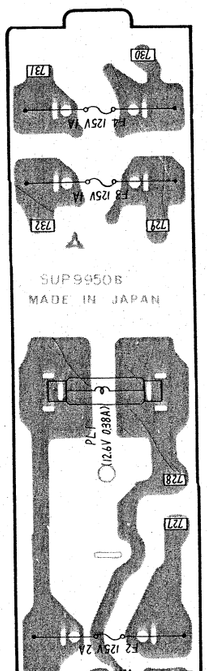

■ STEREO INDICATOR AND ARM INDICATOR CIRCUIT BOARD

■ DIAL CORD INSTALLATION GUIDE

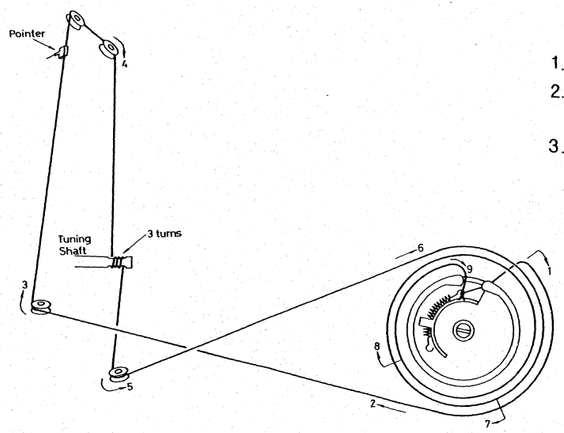

1. Dial cord length is 90 5/8" (230cm).
2. Tuning gang is positioned at maximum capacity. (Frequency is minimum)
3. Arrow marks (1 ~ 9) indicated correct order and direction of stringing dial cord.

■ BLOCK DIAGRAM OF INTEGRATED CIRCUITS

● IC 1 (SVIHA1151)
AM RF, IF Amplifier & Detector Circuit

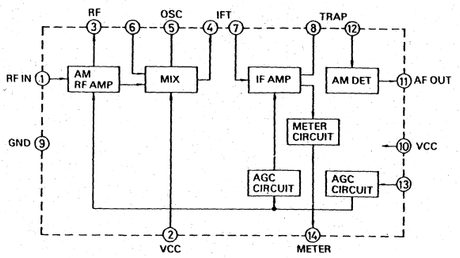

● IC101, 102(SVIAUPC555)
FM IF Amplifier Circuit

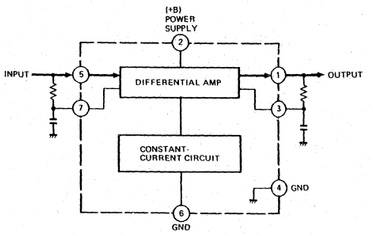

● IC103(SVIAUPC577) FM IF 3 steps Amplifier Circuit

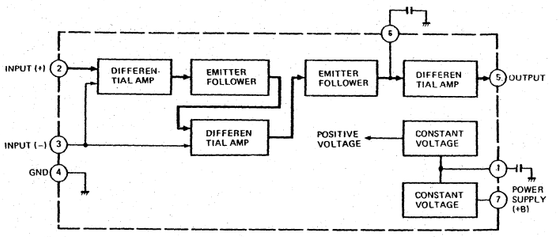

● IC104(SVIHA1156)
FM Multiplex Circuit

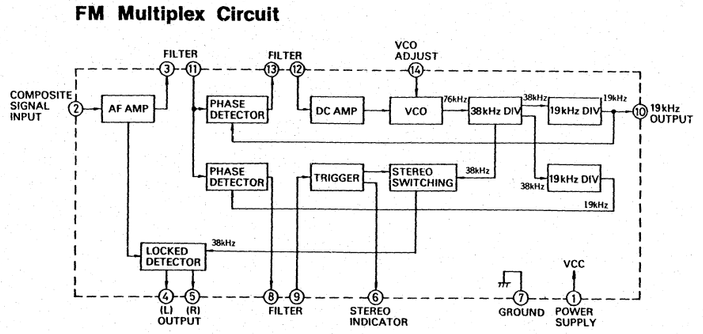

■ POWER AMPLIFIER THERMAL COMPENSATION CIRCUIT BOARD

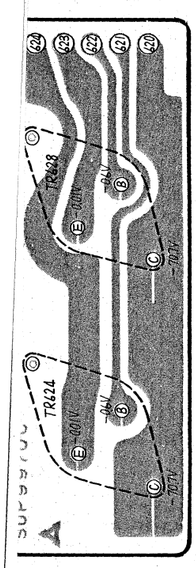

TR619,620
2SC828
THERMAL COMPENSATION

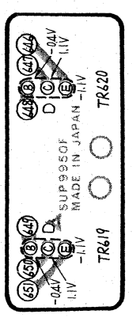

■ SPEAKER PROTECTION CIRCUIT BOARD

TR708,709
2SC828
SPEAKERS PROTECTION SWITCHING

TR710,711
2SC1509
RELAY DRIVER

TR712
2SC1328
OVER LOAD ALARM

TR713
2SA722

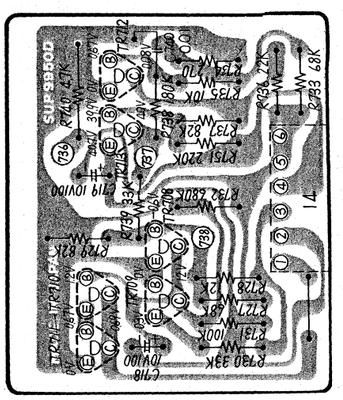

UIT BOARD

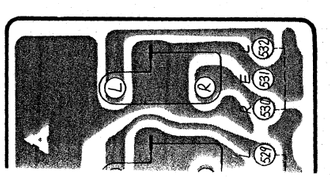

■ BLOCK DIAGRAM

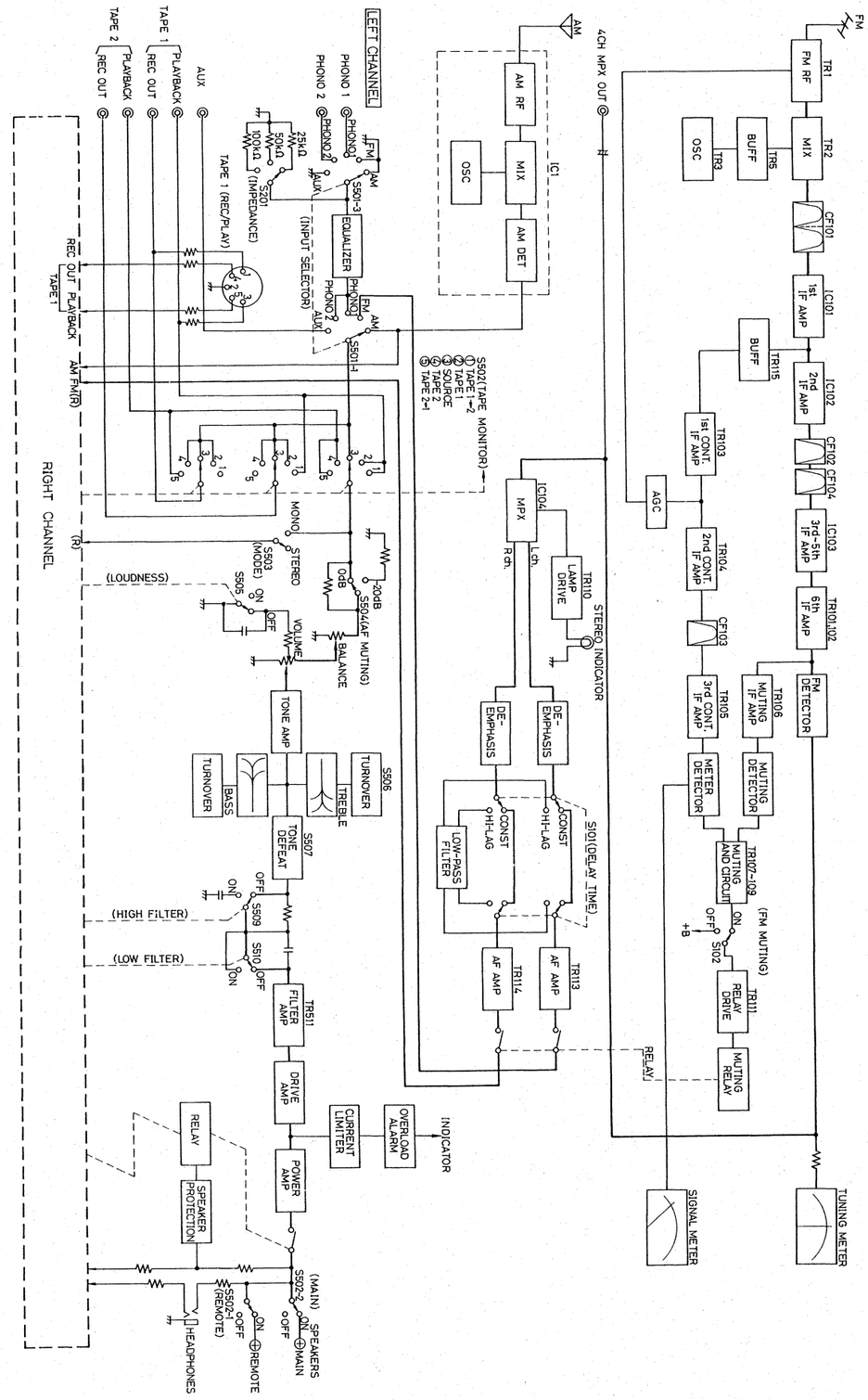

● IC104(SVIHA1156)
FM Multiplex Circuit

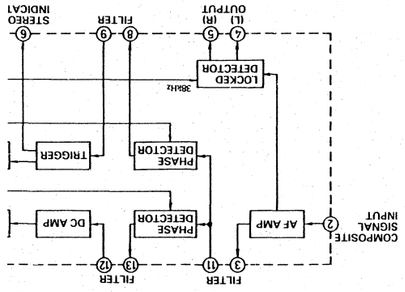

■ BLOCK DIAGRAM OF INTEGRA

● IC 1 (SVIHA1151)
AM RF, IF Amplifier & Detector

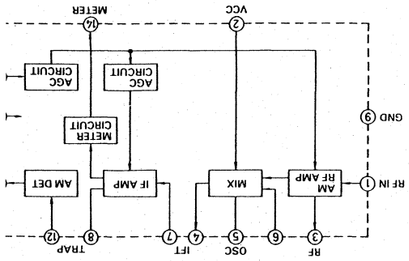

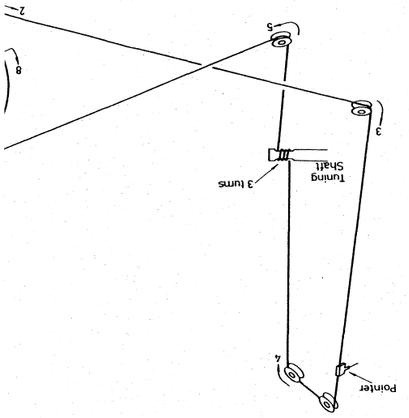

■ DIAL CORD INSTALLATION GU

MENT

er switch to the ON position.

	ADJUSTMENT POINTS	REMARKS
	VR601 (Left Channel) VR602 (Right Channel)	Make sure that DC VTVM becomes 0mV.
	VR603 (Left Channel) VR604 (Right Channel)	Make adjustment so that the indication on DC VTVM becomes 7mV.

monitor selector switch ..... SOURCE
switch ..... MONO
ain line voltage at rated voltage
ut of signal generator should be no higher than necessary to
n an output reading.

PE) ETER)	ADJUSTMENT POINTS	REMARKS
mpli- l	T2 (1st IFT) T3 (2nd IFT) L7 (3rd IFT)	Adjust for maximum amplitude and proper linearity.
scope of	L6 (OSC Coil) L8 (ANT Coil)	Adjust for maximum output, Adjust ferrite core of L8 by screw driver.
scope	CT6 (OSC Trimmer)	Adjust for maximum

	SIGNAL GENERATOR CONNECTION	SIGNAL GENERATOR FREQUENCY	DIAL SETTING	INDICATOR (VTVM or SCOPE)	ADJUSTMENT POINTS	REMARKS
	FM SIGNAL METER ALIGNMENT					
12	Connect to FM antenna terminal through FM dummy antenna.	100MHz (30% Mod. with 400Hz)	100MHz	Signal meter of set.	T102 (MUTING & METER IFT)	Adjust for maximum indication.
13	Apply 19dB (9μV) to set.			Connect DC VTVM to **TP102** Common to chassis.	T103 (MUTING IFT)	Adjust for maximum meter indication. (about 1.5V~2.0V)
14	Apply 100dB (0.1V) to set.			Signal meter of set.	VR101 (METER ADJ)	Adjust VR101 for about 4.7 point of signal meter indication
	FM MUTING ALIGNMENT					
15	Connect to FM antenna terminal through FM dummy antenna. Apply 19 dB (9μV) to set.	100MHz (100% Mod. with 400Hz)	100MHz	Connect VTVM or scope to speaker terminal.	VR102 (MUTING ADJ)	Adjust so that output can be obtained.
	FM MPX PILOT ALIGNMENT					
	Using a frequency counter			Using alternate system		
16	① 98MHz Non-modulated mono signal applied to set. ② Muting switch to "on" ③ Connect frequency counter to **TP103** through resistor (100kΩ). ④ Adjust **VR103** to 19kHz ±30Hz.			① Apply stereo signal from generator or stereo station to receiver. ② Adjust **VR103** until stereo indicator lights up. Cement arm of **VR103** as shown in fig. 3.		
	STEREO SEPARATION ALIGNMENT					
	Note: 1. Stereo modulator ..... Connect stereo modulator output to EXT. MOD. terminal of signal generator. Internal OSC ..... 1kHz Pilot signal modulation .....10% 2. Signal generator ..... Frequency approximately 98MHz. Output level 72 dB (IHF). Modulation mode to FM. 3. Band selector switch ..... FM AUTO 4. Mode switch: ..... STEREO					
	SIGNAL GENERATOR CONNECTION	STEREO MODULATOR MODE and MOD. RATE		INDICATOR (VTVM or SCOPE)	ADJUSTMENT POINT	REMARKS
17	FM antenna terminal through dummy antenna.	L (and R) 30% Modulation.		Connect VTVM or scope to speaker terminals through low pass filter. Refer to fig. 4	VR104	Adjust for minimum right (and left) output.

■ ALIGNMENT INSTRUCTIONS

POWER SUPPLY ALIGNMENT

1. Maintain line voltage at rated voltage.
2. Connect DC VTVM to **TP3**, common to chassis.
3. Adjust **VR701** to negative 40 volts. (−40 V)

MAIN AMPLIFIER ALIGNMENT

Notes:
1. The "Icq" adjustment should be started about 5 minutes after setting the power switch to the ON position.
2. Speakers switch to OFF position.

	CIRCUIT	DC VTVM CONNECTION	ADJUSTMENT POINTS	REMARKS
2	DC UNBALANCE	Connect DC VTVM between point Ⓥ and point Ⓦ (Left Channel), point Ⓥ and point Ⓩ (Right Channel).	VR601 (Left Channel) VR602 (Right Channel)	Make sure that DC VTVM becomes 0mV.
3	Icq (POWER AMPLIFIER CURRENT)	Connect DC VTVM between point Ⓦ and point Ⓧ (Left Channel), point Ⓨ and point Ⓩ (Right Channel).	VR603 (Left Channel) VR604 (Right Channel)	Make adjustment so that the indication on DC VTVM becomes 7mV.

Notes:
1. Muting switch ..... OdB
2. INPUT selector switch ..... AM (AM ALIGNMENT)
   FM AUTO (FM ALIGNMENT)
3. 300Ω FM dummy antenna ..... Refer to fig. 1
4. Speaker switch ..... ON
5. FM muting switch ..... OFF
6. Tape monitor selector switch ..... SOURCE
7. Mode switch ..... MONO
8. Maintain line voltage at rated voltage
9. Output of signal generator should be no higher than necessary to obtain an output reading.

SIGNAL GENERATOR or SWEEP GENERATOR		DIAL SETTING (DISTANCE)	INDICATOR (VTVM or SCOPE) (DISTORTION METER)	ADJUSTMENT POINTS	REMARKS
CONNECTION	FREQUENCY				
AM ALIGNMENT					
High side through 0.001μF to **AM** antenna trimmer terminal. Common to chassis.	455kHz (Set for England to 470kHz)	Point of non-inter-ference	Connect vertical ampli-fier of scope to **TP1** through 0.1μF.	T2 (1st IFT) T3 (2nd IFT) L7 (3rd IFT)	Adjust for maximum amplitude and proper linearity.
Fashion loop of several turns of wire and radiate signal into loop of tuner.	600kHz (30% Mod. with 400Hz)	600kHz (17.9mm (11/16"))	Connect VTVM or scope to speaker terminal of receiver.	L6 (OSC Coil) L8 (ANT Coil)	Adjust for maximum output. Adjust ferrite core of L8 by screw driver.
Fashion loop of several	1500kHz	1500kHz	Connect VTVM or scope	CT6 (OSC Trimmer)	Adjust for maximum

■ DIAL CORD INSTALLATION GUIDE

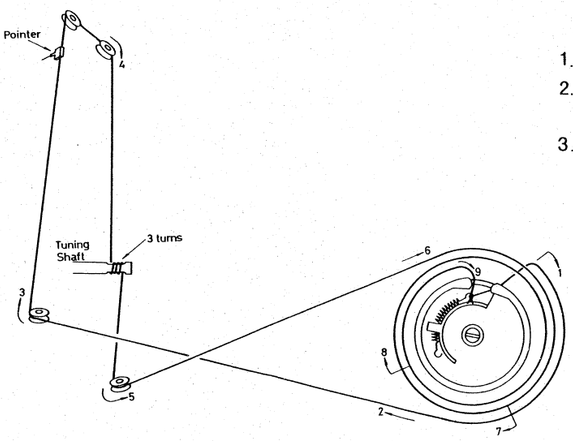

1. Dial cord length is 90 5/8" (230cm).
2. Tuning gang is positioned at maximum capacity. (Frequency is minimum)
3. Arrow marks (1 ~ 9) indicated correct order and direction of stringing dial cord.

■ BLOCK DIAGRAM OF INTEGRATED CIRCUITS

● IC 1 (SVIHA1151)
AM RF, IF Amplifier & Detector Circuit

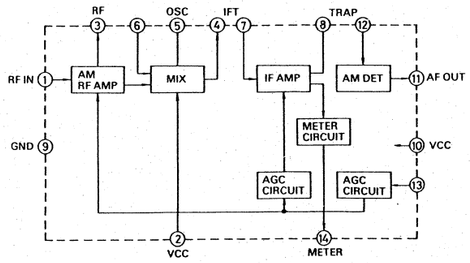

● IC101, 102(SVIAUPC555)
FM IF Amplifier Circuit

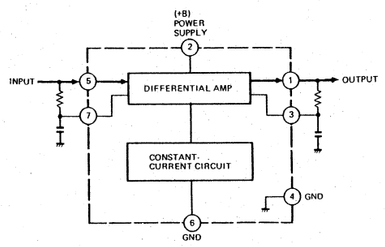

● IC103(SVIAUPC577) FM IF 3 steps Amplifier Circuit

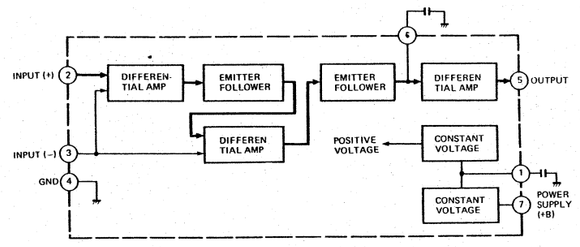

● IC104(SVIHA1156)
FM Multiplex Circuit

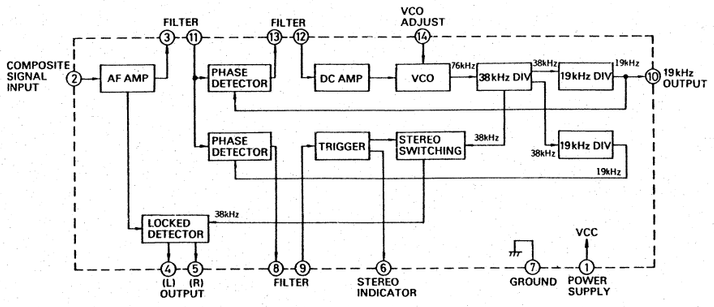

■ ALIGNMENT INSTRUCTIONS

POWER SUPPLY ALIGNMENT

1. Maintain line voltage at rated voltage.
2. Connect DC VTVM to **TP3**, common to chassis.
3. Adjust **VR701** to negative 40 volts. (−40 V)

MAIN AMPLIFIER ALIGNMENT

Notes:
1. The "Icq" adjustment should be started about 5 minutes after setting the power switch to the ON position.
2. Speakers switch to OFF position.

	CIRCUIT	DC VTVM CONNECTION	ADJUSTMENT POINTS	REMARKS
2	DC UNBALANCE	Connect DC VTVM between point Ⓥ and point Ⓦ (Left Channel), point Ⓥ and point Ⓩ (Right Channel).	VR601 (Left Channel) VR602 (Right Channel)	Make sure that DC VTVM becomes 0mV.
3	Icq (POWER AMPLIFIER CURRENT)	Connect DC VTVM between point Ⓦ and point Ⓧ (Left Channel), point Ⓨ and point Ⓩ (Right Channel).	VR603 (Left Channel) VR604 (Right Channel)	Make adjustment so that the indication on DC VTVM becomes 7mV.

Notes:
1. Muting switch ..... OdB
2. INPUT selector switch ..... AM (AM ALIGNMENT)
FM AUTO (FM ALIGNMENT)
3. 300Ω FM dummy antenna ..... Refer to fig. 1
4. Speaker switch ..... ON
5. FM muting switch ..... OFF
6. Tape monitor selector switch ..... SOURCE
7. Mode switch ..... MONO
8. Maintain line voltage at rated voltage
9. Output of signal generator should be no higher than necessary to obtain an output reading.

	SIGNAL GENERATOR or SWEEP GENERATOR CONNECTION	SIGNAL GENERATOR or SWEEP GENERATOR FREQUENCY	DIAL SETTING (DISTANCE)	INDICATOR (VTVM or SCOPE) (DISTORTION METER)	ADJUSTMENT POINTS	REMARKS
	AM ALIGNMENT					
4	High side through 0.001μF to **AM** antenna trimmer terminal. Common to chassis.	455kHz (Set for England to 470kHz)	Point of non-inter-ference	Connect vertical amplifier of scope to **TP1** through 0.1μF.	T2 (1st IFT) T3 (2nd IFT) L7 (3rd IFT)	Adjust for maximum amplitude and proper linearity.
5	Fashion loop of several turns of wire and radiate signal into loop of tuner.	600kHz (30% Mod. with 400Hz)	600kHz (3⅜") (17.9mm)	Connect VTVM or scope to speaker terminal of receiver.	L6 (OSC Coil) L8 (ANT Coil)	Adjust for maximum output, Adjust ferrite core of L8 by screw driver.
6	Fashion loop of several turns of wire and radiate signal into loop of tuner.	1500kHz (30% Mod. with 400Hz)	1500kHz (7⅝") (191.4mm)	Connect VTVM or scope to speaker terminal of receiver.	CT6 (OSC Trimmer) CT5 (ANT Trimmer)	Adjust for maximum output. Repeat steps (5) and (6).
	FM IF ALIGNMENT					
7	High side through 0.001μF to **TP4**, Common to chassis.	10.7MHz	Point of non-inter-ference	Connect vertical amplifier of scope to **TP101** through detector. (Refer to fig. 2)	T1 (FM IFT)	Adjust for maximum amplitude and proper linearity.
8		No Signal	Point of non-inter-ference	Center tuning meter of set.	T101 (DISCRI IFT)(B) Green Core	Adjust for center position of center tuning meter.
	FM RF ALIGNMENT					
9	Connect to FM antenna terminal through FM dummy antenna.	90MHz (100% Mod. with 400Hz)	90MHz (1 1/16") (28.5mm)	Connect VTVM or scope to speaker terminal of receiver.	L5 (OSC Coil) L4 (DET Coil) 2 L3 (DET Coil) 1 L2 (ANT Coil)	Adjust for maximum output.
10	Connect to FM antenna terminal through FM dummy antenna.	106MHz (100% Mod. with 400Hz)	106MHz (7⅝") (181.7mm)	Connect VTVM or scope to speaker terminal of receiver.	CT4 (OSC Trimmer) CT3 (DET Trimmer) 2 CT2 (DET Trimmer) 1 CT1 (ANT Trimmer)	Adjust for maximum output. Repeat steps (9) and (10).
	FM MONO DISTORTION ALIGNMENT					
11	Connect to FM antenna terminal through FM dummy antenna.	100MHz (100% Mod. with 400Hz)	100MHz	Connect distortion meter to speaker terminal of receiver.	T101 (DISCRI IFT)(A) Orange Core	Adjust for minimum Distortion meter indication.

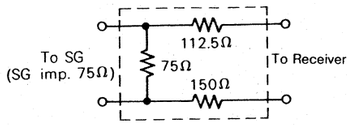

300Ω FM Dummy Antenna

Fig. 1

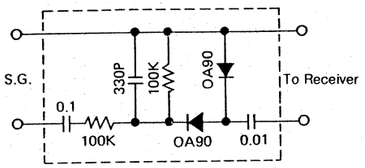

DETECTOR

Fig. 2

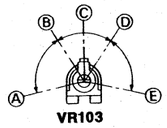

VR103

A – B, D – E: Stereo OFF Position.
B – D: Stereo ON Position (Indicator Lighting).
C: Adjust Point of Pilot Circuit.

Fig. 3

	SIGNAL GENERATOR CONNECTION	SIGNAL GENERATOR FREQUENCY	DIAL SETTING	INDICATOR (VTVM or SCOPE)	ADJUSTMENT POINTS	REMARKS
	FM SIGNAL METER ALIGNMENT					
12	Connect to FM antenna terminal through FM dummy antenna.	100MHz (30% Mod. with 400Hz)	100MHz	Signal meter of set.	T102 (MUTING & METER IFT)	Adjust for maximum indication.
13	Apply 19dB (9μV) to set.			Connect DC VTVM to **TP102** Common to chassis.	T103 (MUTING IFT)	Adjust for maximum meter indication. (about 1.5V~2.0V)
14	Apply 100dB (0.1V) to set.			Signal meter of set.	VR101 (METER ADJ)	Adjust VR101 for about 4.7 point of signal meter indication
	FM MUTING ALIGNMENT					
15	Connect to FM antenna terminal through FM dummy antenna. Apply 19 dB (9μV) to set.	100MHz (100% Mod. with 400Hz)	100MHz	Connect VTVM or scope to speaker terminal.	VR102 (MUTING ADJ)	Adjust so that output can be obtained.
	FM MPX PILOT ALIGNMENT					
16	Using a frequency counter ① 98MHz Non-modulated mono signal applied to set. ② Muting switch to "on" ③ Connect frequency counter to **TP103** through resistor (100kΩ). ④ Adjust **VR103** to 19kHz ±30Hz.			Using alternate system ① Apply stereo signal from generator or stereo station to receiver. ② Adjust **VR103** until stereo indicator lights up. Cement arm of **VR103** as shown in fig. 3.		
	STEREO SEPARATION ALIGNMENT					
	Note: 1. Stereo modulator ..... Connect stereo modulator output to EXT. MOD. terminal of signal generator. Internal OSC ..... 1kHz Pilot signal modulation .....10% 2. Signal generator ..... Frequency approximately 98MHz. Output level 72 dB (IHF). Modulation mode to FM. 3. Band selector switch ..... FM AUTO 4. Mode switch..... STEREO					
17	FM antenna terminal through dummy antenna.	L (and R) 30% Modulation.		Connect VTVM or scope to speaker terminals through low pass filter. Refer to fig. 4	VR104	Adjust for minimum right (and left) output.

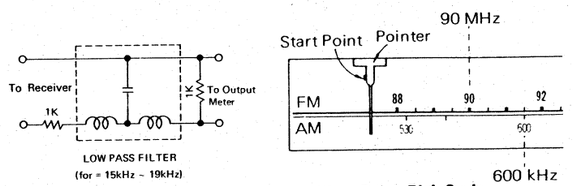

Fig. 4

Start Point Dial Scale

Fig. 5

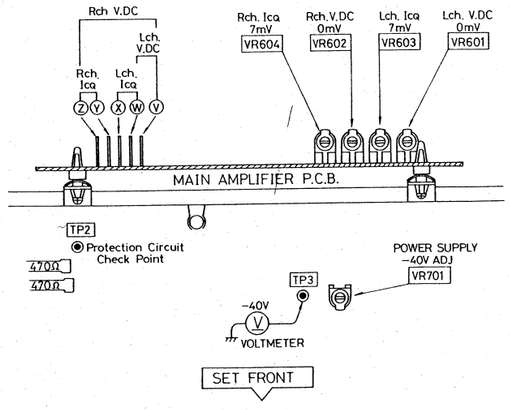

• Alignment Points

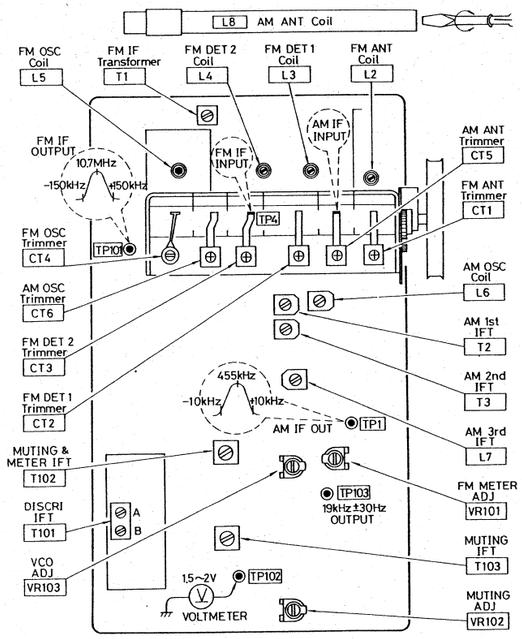

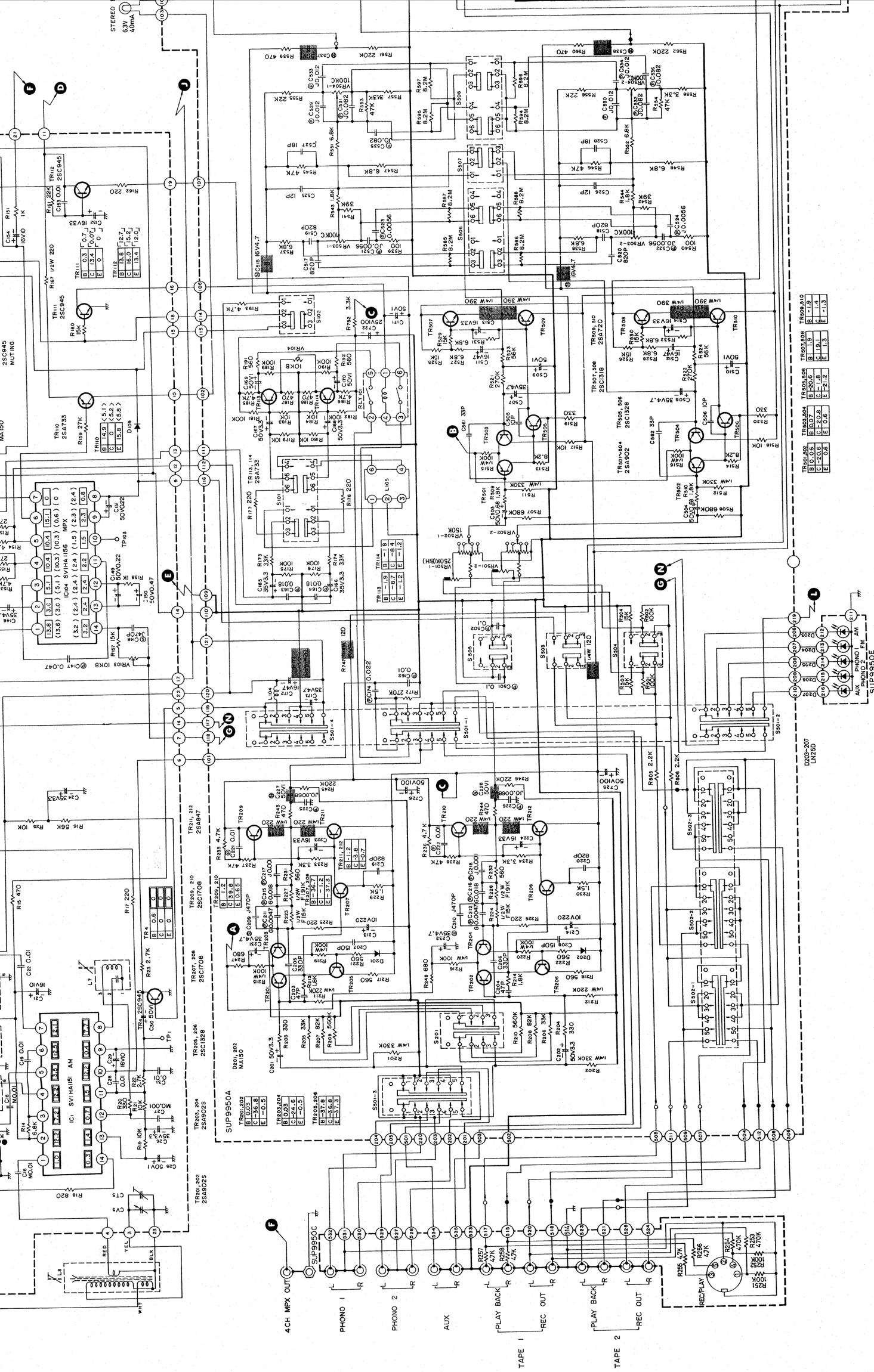

STEREO
6.3V
40mA
SUP9950A
SUP9950C
SUP9950E
4CH MPX OUT
PHONO 1
PHONO 2
AUX
PLAY BACK
REC OUT
TAPE 1
TAPE 2
REC/PLAY

Schematic Diagram·····Model SA-5760

(This schematic diagram may be modified at any time with the development of new technology)

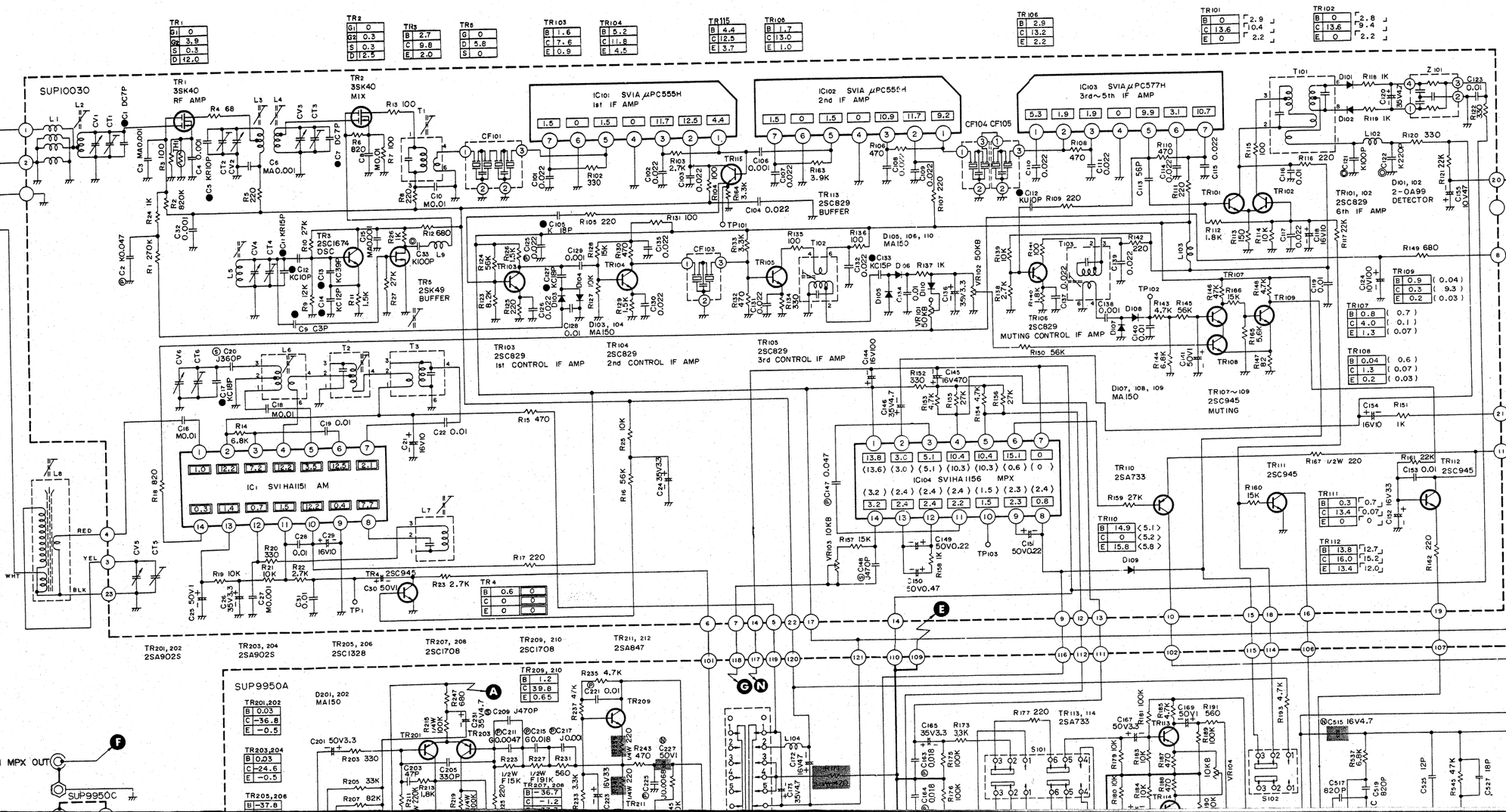

it of new technology)

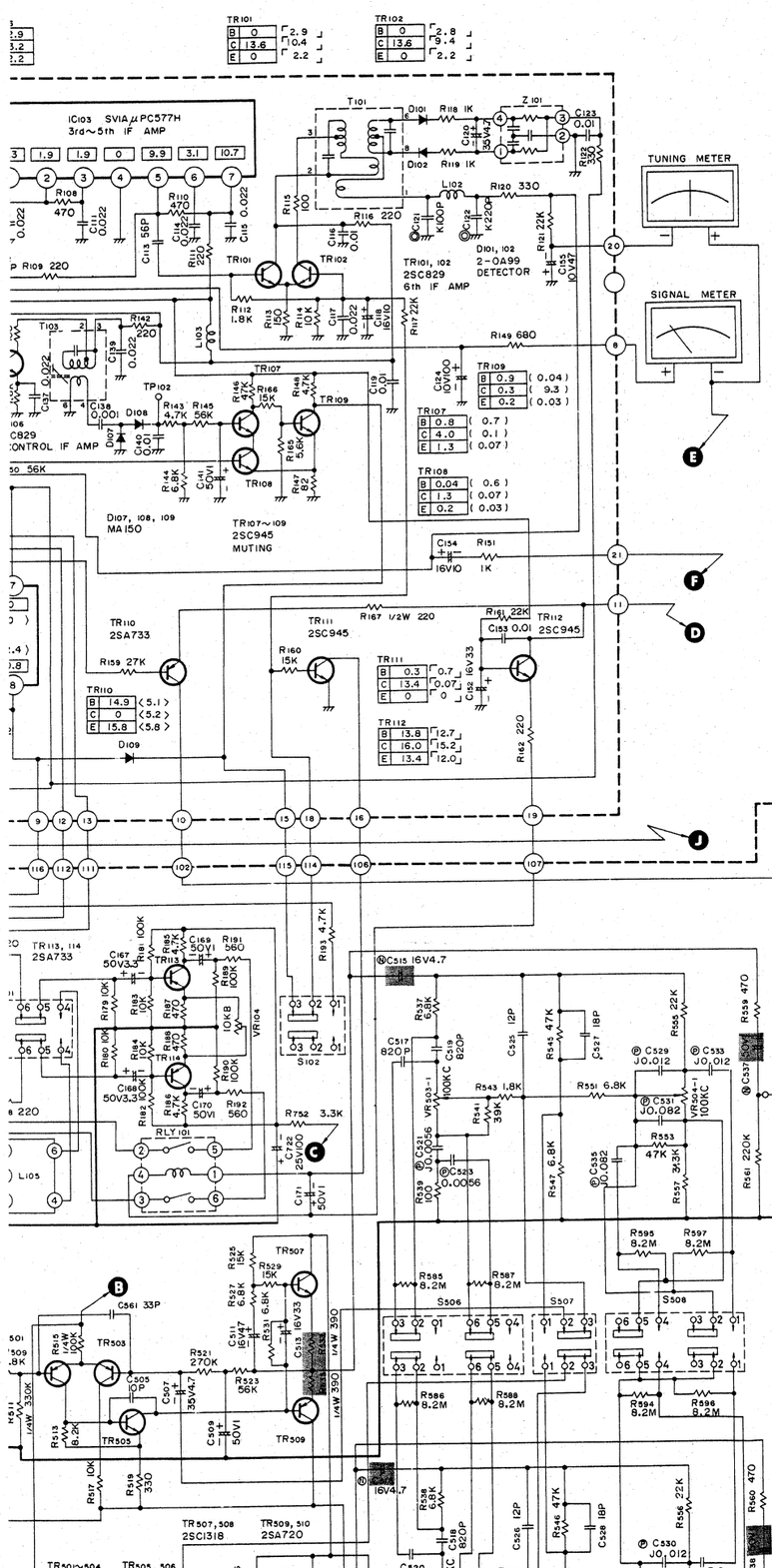

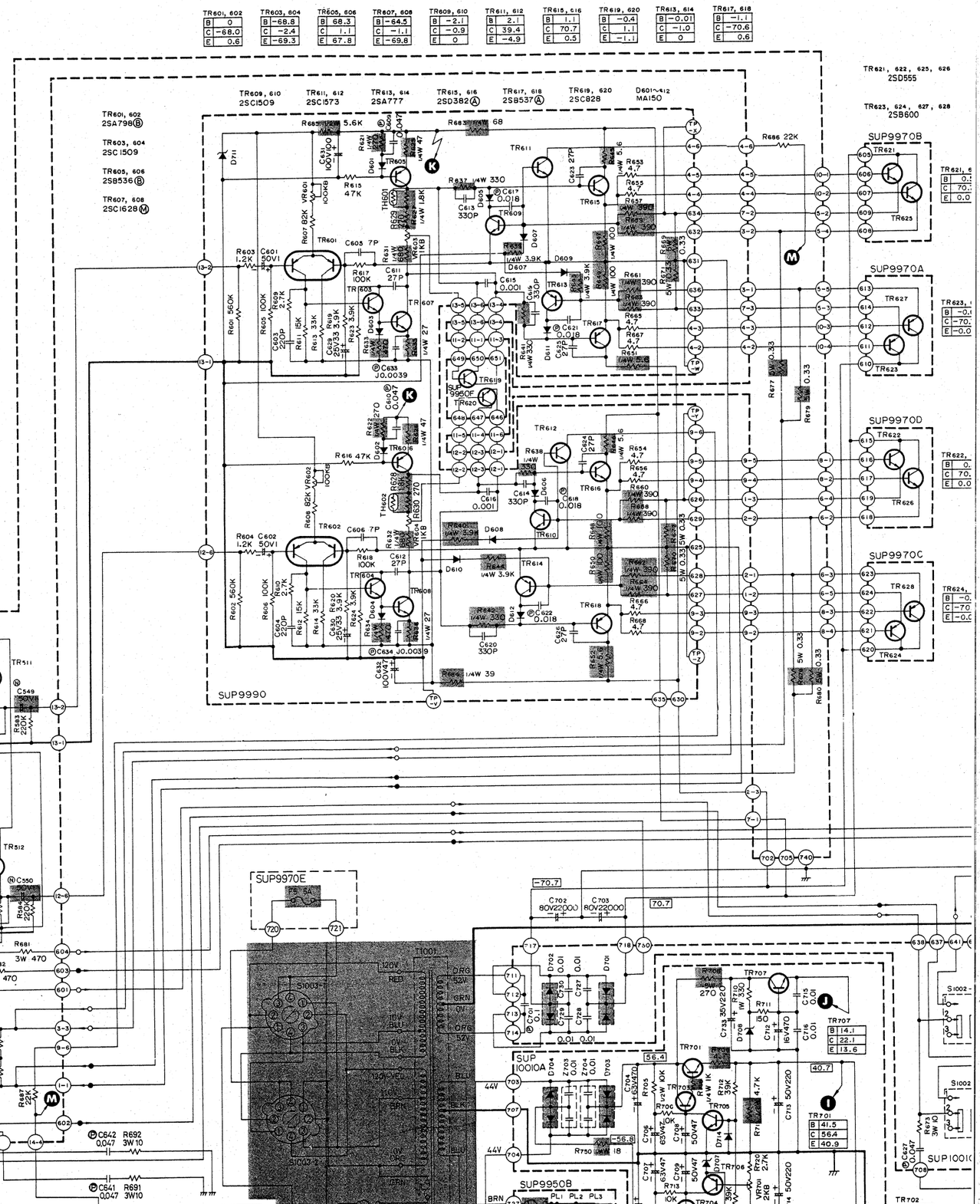
TR601, 602
B 0
C -68.0
E 0.6
TR603, 604
B -68.8
C -2.4
E -69.3
TR605, 606
B 68.3
C -1.1
E 67.8
TR607, 608
B -64.5
C -1.1
E -69.8
TR609, 610
B -2.1
C -0.9
E 0
TR611, 612
B 2.1
C 39.4
E -4.9
TR615, 616
B 1.1
C 70.7
E 0.5
TR619, 620
B -0.4
C 1.1
E -1.1
TR613, 614
B -0.01
C -1.0
E 0
TR617, 618
B -1.1
C -70.6
E 0.6
TR601, 602
2SA798Ⓑ
TR603, 604
2SC1509
TR605, 606
2SB536Ⓑ
TR607, 608
2SC1628Ⓜ
TR609, 610
2SC1509
TR611, 612
2SC1573
TR613, 614
2SA777
TR615, 616
2SD382Ⓐ
TR617, 618
2SB537Ⓐ
TR619, 620
2SC828
D601~612
MA150
TR621, 622, 625, 626
2SD555
TR623, 624, 627, 628
2SB600
SUP9970B
SUP9970A
SUP9970D
SUP9970C
SUP9990
SUP9970E
SUP9950B
SUP10010A
TR621, 625
B 0.1
C 70.7
E 0.6
TR623, 627
B -0.1
C 1.0
E -1.0
TR622, 626
B 0.1
C 70.7
E 0.6
TR624, 628
B -0.1
C -70.7
E -0.6
TR702
B -56.3
C -40.2
E 0
TR701
B 141.5
C 56.4
E 40.9
TR707
B 14.1
C 22.1
E 13.6
R601 56K
R602 560K
R603 1.2K
R604 1.2K
R605 100K
R606 100K
R607 82K
R608 82K
R609 100K
R610 2.7K
R611 15K
R612 15K
R613 3.3K
R614 3.3K
R615 47K
R616 47K
R617 100K
R618 100K
R619 3.9K
R620 3.9K
R621 3.9K
R622 3.9K
R623 3.9K
R624 3.9K
C601 50V1
C602 50V1
C603 220P
C604 220P
C605 7P
C606 7P
C607 27P
C608 27P
C609 0.047
C610 0.047
C611 27P
C612 27P
C613 330P
C614 330P
C615 0.001
C616 0.001
C617 0.018
C618 0.018
C619 0.018
C620 330P
C621 0.018
C622 0.018
C623 27P
C624 27P
C625 27P
C626 27P
C627 0.018
C628 0.018
C629 0.018
C630 25V33
C631 100V100
C632 100V47
C633 J0.0039
C634 J0.0039
C635 100V47
C636 1/4W 39
D601
D602
D603
D604
D605
D606
D607
D608
D609
D610
D611
D612
D613
D614
D615
D616
D617
D618
D619
D620
D621
D622
TH601 100KB
TH602 100KB
VR601 100KB
VR602 100KB
VR603 1KB
VR604 1KB
R615 47K
R637 1/4W 330
R638 1/4W 330
R639 1/4W 330
R640 1/4W 330
R641 1/4W 330
R642 1/4W 330
R643 1/4W 330
R644 1/4W 330
R645 1/4W 330
R646 1/4W 330
R647 1/4W 330
R648 1/4W 330
R649 1/4W 330
R650 1/4W 330
R651 1/4W 3.9K
R652 1/4W 3.9K
R653 1/4W 3.9K
R654 1/4W 3.9K
R655 1/4W 3.9K
R656 1/4W 3.9K
R657 1/4W 3.9K
R658 1/4W 3.9K
R659 1/4W 3.9K
R660 1/4W 3.9K
R661 1/4W 390
R662 1/4W 390
R663 1/4W 390
R664 1/4W 390
R665 1/4W 390
R666 1/4W 390
R667 1/4W 390
R668 1/4W 390
R669 1/4W 390
R670 1/4W 390
R671 1/4W 100
R672 1/4W 100
R673 1/4W 100
R674 1/4W 100
R675 1/4W 100
R676 1/4W 100
R677 1/4W 100
R678 1/4W 100
R679 0.33
R680 0.33
R681 0.33
R682 0.33
R683 68
R684 22K
R685 5.6K
R686 22K
R687 5W 0.33
R688 5W 0.33
R689 5W 0.33
R690 5W 0.33
R691 5W 0.33
R692 5W 0.33
R693 5W 0.33
R694 5W 0.33
R695 5W 0.33
R696 5W 0.33
R697 5W 0.33
R698 5W 0.33
R699 5W 0.33
R700 5W 0.33
R701 5W 0.33
R702 5W 0.33
R703 5W 0.33
R704 5W 0.33
R705 5W 0.33
R706 5W 0.33
R707 5W 0.33
R708 5W 0.33
R709 5W 0.33
R710 5W 0.33
R711 5W 0.33
R712 5W 0.33
R713 5W 0.33
R714 5W 0.33
R715 5W 0.33
R716 5W 0.33
R717 5W 0.33
R718 5W 0.33
R719 5W 0.33
R720 5W 0.33
R721 5W 0.33
R722 5W 0.33
R723 5W 0.33
R724 5W 0.33
R725 5W 0.33
R726 5W 0.33
R727 5W 0.33
R728 5W 0.33
R729 5W 0.33
R730 5W 0.33
R731 5W 0.33
R732 5W 0.33
R733 5W 0.33
R734 5W 0.33
R735 5W 0.33
R736 5W 0.33
R737 5W 0.33
R738 5W 0.33
R739 5W 0.33
R740 5W 0.33
R741 5W 0.33
R742 5W 0.33
R743 5W 0.33
R744 5W 0.33
R745 5W 0.33
R746 5W 0.33
R747 5W 0.33
R748 5W 0.33
R749 5W 0.33
R750 18
R751 1/4W 39
R752 3.3K
R753 5W 0.33
R754 5W 0.33
R755 5W 0.33
R756 5W 0.33
R757 5W 0.33
R758 5W 0.33
R759 5W 0.33
R760 5W 0.33
R761 5W 0.33
R762 5W 0.33
R763 5W 0.33
R764 5W 0.33
R765 5W 0.33

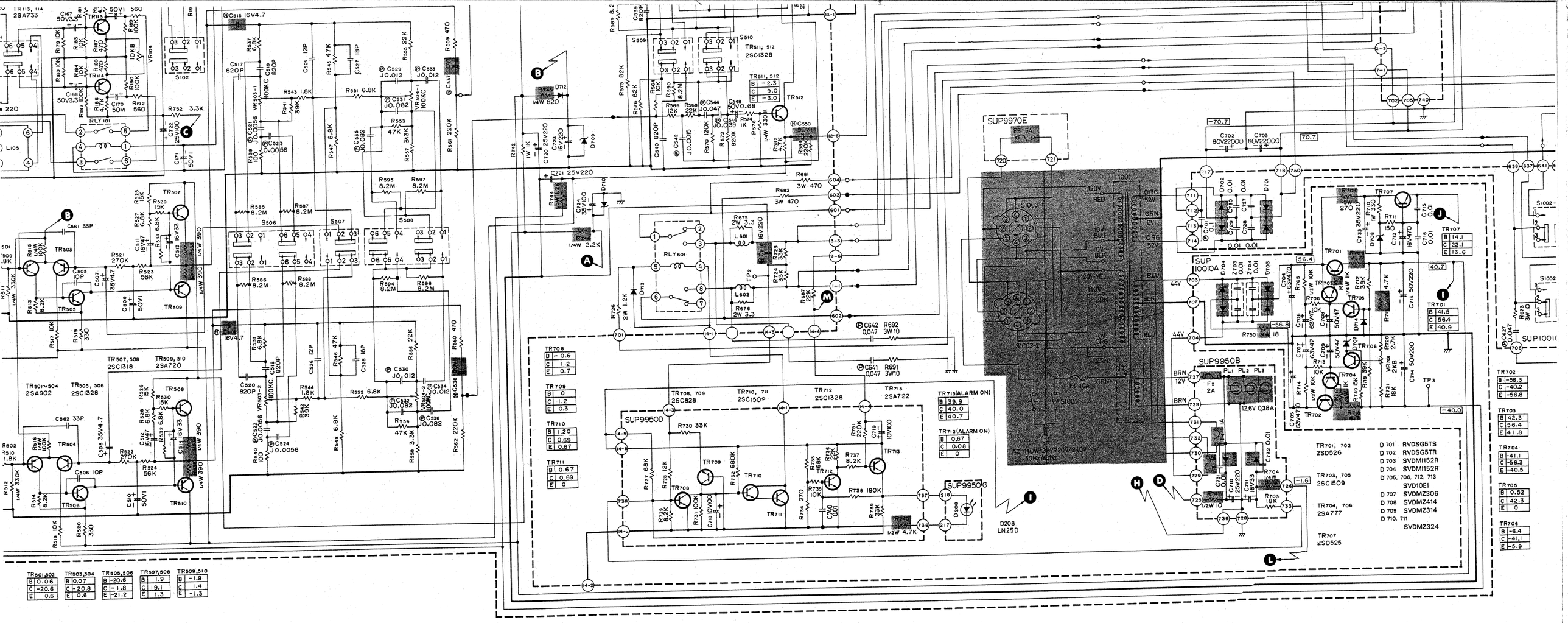

TR708	
B	-0.6
C	1.2
E	0.7

TR709	
B	0
C	1.2
E	0.3

TR710	
B	1.20
C	0.69
E	0.67

TR711	
B	0.67
C	0.69
E	0

TR713(ALARM ON)	
B	39.9
C	40.0
E	40.7

TR712(ALARM ON)	
B	0.67
C	0.08
E	0

TR511, 512	
B	-2.3
C	9.0
E	-3.0

TR702	
B	-56.3
C	-40.2
E	-56.8

TR703	
B	42.3
C	56.4
E	41.8

TR704	
B	-41.1
C	-56.3
E	-40.5

TR705	
B	0.52
C	42.3
E	0

TR706	
B	-6.4
C	-41.1
E	-5.9

TR701	
B	41.5
C	56.4
E	40.9

TR707	
B	14.1
C	22.1
E	13.6

TR501,502	
B	0.06
C	-20.6
E	0.6

TR503,504	
B	0.07
C	-20.8
E	0.6

TR505,506	
B	-20.6
C	-1.8
E	-21.2

TR507,508	
B	1.9
C	19.1
E	1.3

TR509,510	
B	-1.9
C	1.4
E	-1.3

TR601, 602	
B	0
C	−68.0
E	0.6

TR603, 604	
B	−68.8
C	−2.4
E	−69.3

TR605, 606	
B	68.3
C	1.1
E	67.8

TR607, 608	
B	−64.5
C	−1.1
E	−69.8

TR609, 610	
B	−2.1
C	−0.9
E	0

TR611, 612	
B	2.1
C	39.4
E	−4.9

TR615, 616	
B	1.1
C	70.7
E	0.5

TR619, 620	
B	−0.4
C	1.1
E	−1.1

TR613, 614	
B	−0.01
C	−1.0
E	0

TR617, 618	
B	−1.1
C	−70.6
E	0.6

TR609, 610 2SC1509
TR611, 612 2SC1573
TR613, 614 2SA777
TR615, 616 2SD382Ⓐ
TR617, 618 2SB537Ⓐ
TR619, 620 2SC828
D601~612 MA150

TR601, 602 2SA798Ⓑ
TR603, 604 2SC1509
TR605, 606 2SB536Ⓑ
TR607, 608 2SC1628Ⓜ

TR621, 622, 625, 626 2SD555
TR623, 624, 627, 628 2SB600

TR621, 625	
B	0.5
C	70.7
E	0.01

TR623, 627	
B	−0.6
C	−70.7
E	−0.01

TR622, 626	
B	0.5
C	70.7
E	0.01

TR624, 628	
B	−0.6
C	−70.7
E	−0.01

TR511, 512	
B	−2.3
C	9.0
E	−3.0

SUP9990
SUP9970B
SUP9970A
SUP9970D
SUP9970C
SUP9970E
SUP10010A
SUP10010B

BOTTOM VIEW

SVIAμPC555H
SVIAμPC577H
SVIHA1151
SVIHA1156
3SK40
2SK49
2SD382
2SB537
2SD526
2SD525
2SC1628
2SA798
2SA733
2SA902
2SC1328
2SC1509
2SC1573
2SC828
2SC829
2SC945
2SA777
2SA722
2SC1318
2SC1674
2SC1708
2SA847
2SB600
2SD555

MAIN
REMOTE
HEADPHONES

T2, 3
L6, 7
T1, 102, 103
T101

NOTES
- VR101 FM meter adjustment
- VR102 FM muting level adjustment
- VR103 PLL voltage control oscillator ajustment
- VR104 Separation adjustment
- VR501 Balance control
- VR502 Volume control
- VR503 Treble control
- VR504 Bass control
- VR601, 602 DC unbalance adjustment
- VR603, 604 ICQ adjustment
- VR701 Pre power supply voltage adjustment

IMPORTANT SAFETY NOTICE
THE SHADED AREA ON THIS SCHEMATIC DIAGRAM INCORPORATES SPECIAL FEATURES IMPORTANT FOR SAFETY. WHEN SERVICING IT IS ESSENTIAL THAT ONLY MANUFACTURER'S SPECIFIED BE USED FOR THE CRITICAL COMPONENTS IN THE SHADED AREA OF THE SCHEMATIC.

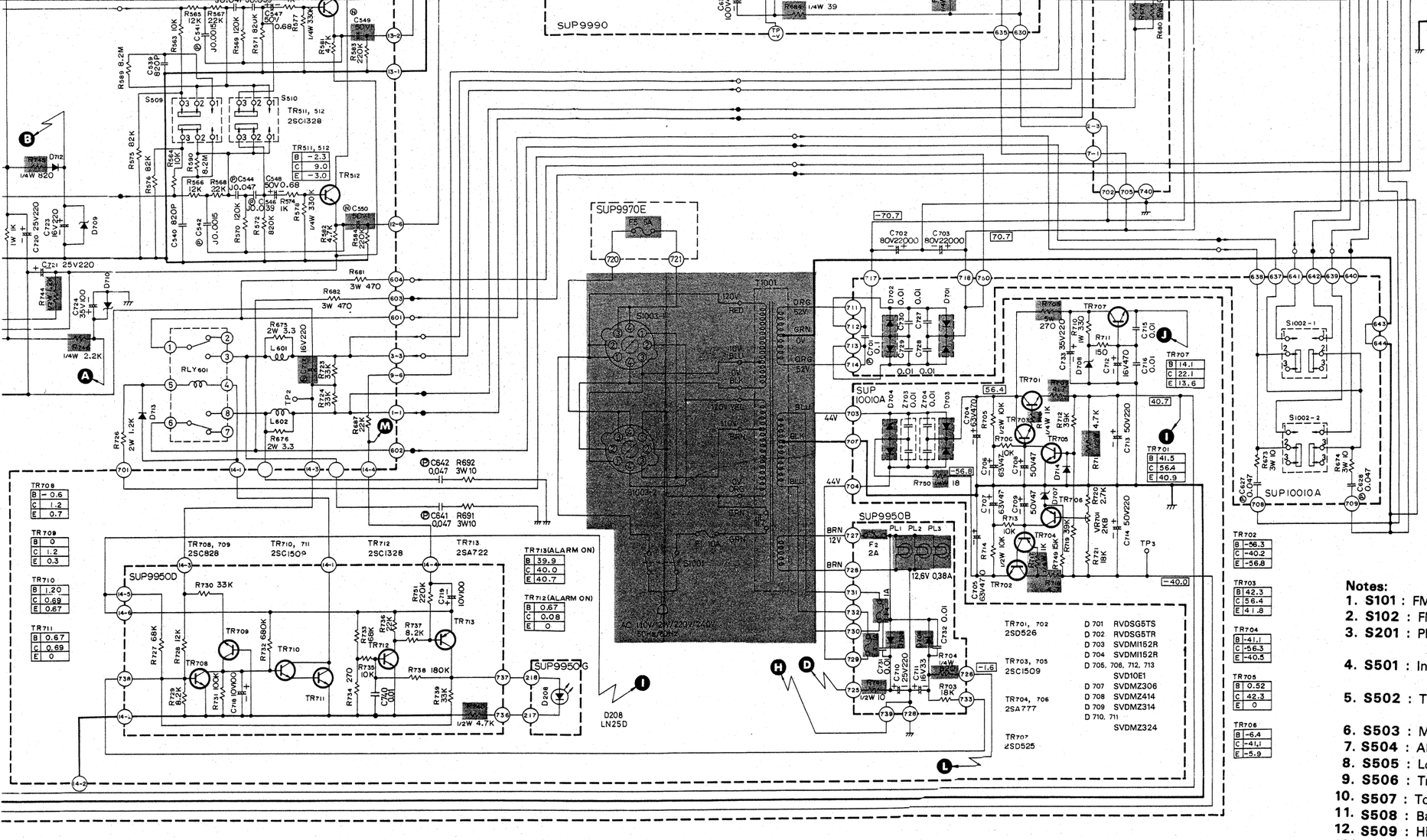

NOTES

VR101	FM meter adjustment
VR102	FM muting level adjustment
VR103	PLL voltage control oscillator ajustment
VR104	Separation adjustment
VR501	Balance control
VR502	Volume control
VR503	Treble control
VR504	Bass control
VR601, 602	DC unbalance adjustment
VR603, 604	ICQ adjustment
VR701	Pre power supply voltage adjustment

IMPORTANT SAFETY NOTICE:
THE SHADED AREA ON THIS SCHEMATIC DIAGRAM INCORPORATES SPECIAL FEATURES IMPORTANT FOR SAFETY. WHEN SERVICING IT IS ESSENTIAL THAT ONLY MANUFACTURER'S SPECIFIED BE USED FOR THE CRITICAL COMPONENTS IN THE SHADED AREAS OF THE SCHEMATIC.

Notes:

1. **S101** : FM delay time switch in **"CONSTANT"** position. (CONST↔HI-LAG)
2. **S102** : FM muting switch in **"ON"** position. (ON ↔ OFF)
3. **S201** : Phono impedance selector switch in **"25kΩ"** position.
   (① 25kΩ ↔ ② 50kΩ ↔ ③ 100kΩ)
4. **S501** : Input selector switch in **"AM"** position.
   (① AM ↔ ② FM AUTO ↔ ③ PHONO 1 ↔ ④ PHONO 2 ↔ ⑤ AUX)
5. **S502** : Tape monitor switch in **"TAPE 1►2"** position.
   (① TAPE 1►2 ② TAPE 1 ③ SOURCE ④ TAPE 2 ⑤ TAPE 2►1)
6. **S503** : Mode switch in **"STEREO"** position. (STEREO ↔ MONO)
7. **S504** : AF muting switch in **"0dB"** position. (0dB ↔ −20dB)
8. **S505** : Loudness switch in **"OFF"** position. (OFF ↔ ON)
9. **S506** : Treble turnover switch in **"2.5kHz"** position. (2.5kHz ↔ 5kHz)
10. **S507** : Tone defeat switch in **"ON"** position. (ON ↔ DEFEAT)
11. **S508** : Bass turnorver switch in **"500Hz"** position. (500Hz ↔ 250Hz)
12. **S509** : High filter switch in **"OFF"** position. (OFF ↔ ON)
13. **S510** : Low filter switch in **"OFF"** position. (OFF ↔ ON)
14. **S1001** : Power switch in **"OFF"** position. (OFF ↔ ON)
15. **S1002-1** : Remote speaker switch in **"OFF"** position. (OFF ↔ ON)
16. **S1002-2** : Main speaker switch in **"OFF"** position. (OFF ↔ ON)
17. **S1003:** Voltage selector switch in "110V" position
    ① 110V ↔ ② 120V ↔ ③ 220V ↔ ④ 240V
18. DC voltage measurements are taken with DC VTVM from chassis ground.
    - ▭ Marks voltage····· FM monoral or AM signal reception
    - 〈 〉 Marks voltage····· FM stereo signal rece ption
    - ▭ Marks voltage····· AM position
    - ⌊ ⌉ Marks voltage····· Muting circuit operative

■ EQUALIZER AMPLIFIER, TAPE MONITOR, TONE CONTROL, TONE AMPLIFIER, FILTER AMPLIFIER, MUTING RELAY & SPEAKER PROTECTION RELAY CIRCUIT BOARD

EQUALIZER AMPLIFIER

TR201,202,203,204	TR205,206	TR207,208	TR209,210	TR211,212
2SA902S	2SC1328	2SC1708	2SC1708	2SA847
DIFFERENTIAL	CURRENT MIRROR	AF AMP	OUTPUT AMP	OUTPUT AMP

FM OUTPUT AMP

TR113,114
2SA733

VOLTAGE REGULATOR

TR701,702	TR703,705	TR704,706	TR707
2SD526	2SC1509	2SA777	2SD525

FILTER AMPLIFIER

TR511,512
2SC1328

TON

TR501,502,503,504	TR505,506
2SA902	2SC132
DIFFERENTIAL	AF AMP

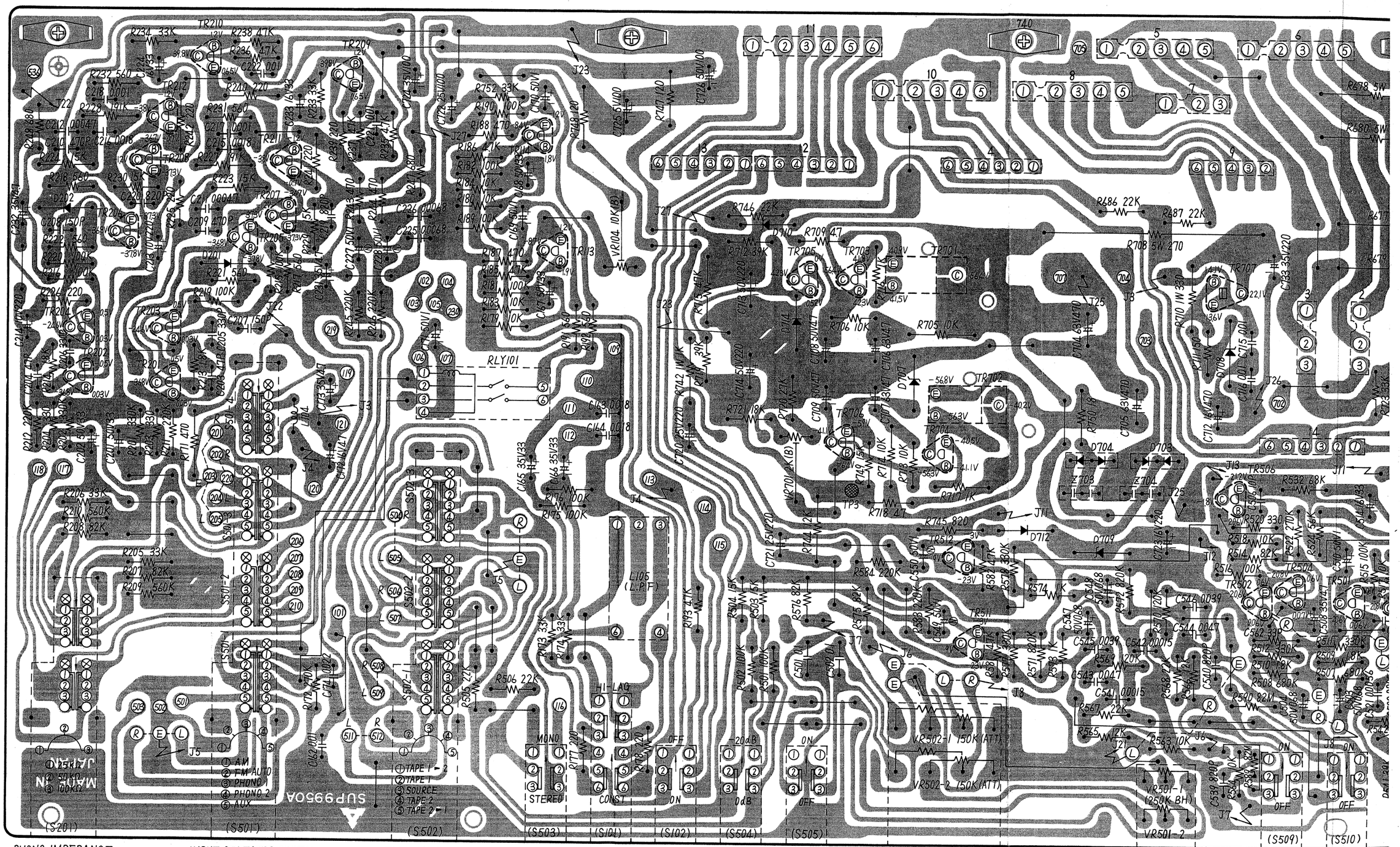

FIER, FILTER AMPLIFIER, MUTING RELAY & SPEAKER PROTECTION RELAY CIRCUIT BOARD

OUTPUT AMP

TR113,114
2SA733

VOLTAGE REGULATOR

TR701,702	TR703,705	TR704,706	TR707
2SD526	2SC1509	2SA777	2SD525

FILTER AMPLIFIER

TR511,512
2SC1328

TONE AMPLIFIER

TR501,502,503,504	TR505,506	TR507,508	TR509,510
2SA902	2SC1328	2SC1318	2SA720
DIFFERENTIAL	AF AMP	OUTPUT AMP	OUTPUT AMP

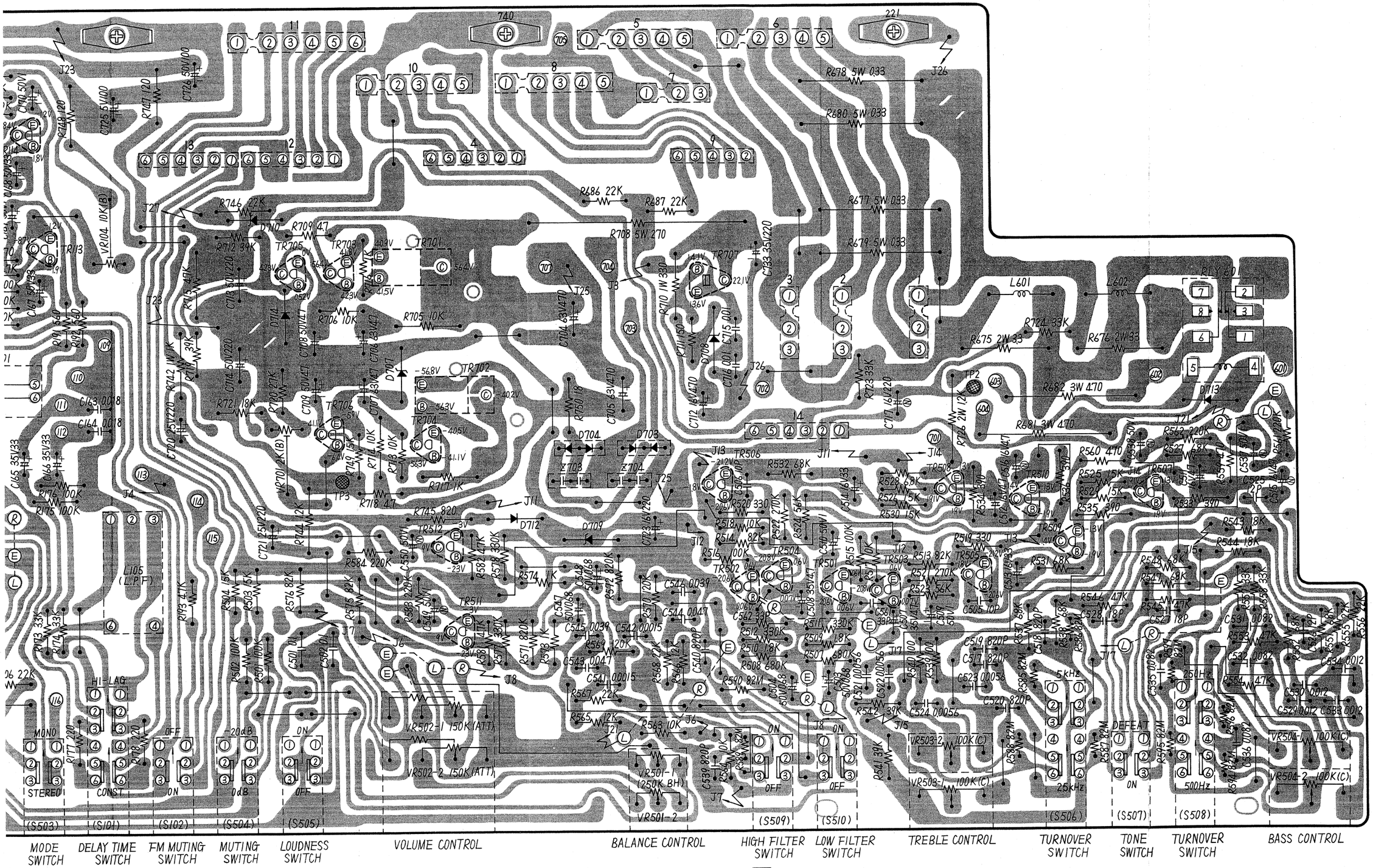

■ MAIN AMPLIFIER CIRCUIT BOARD

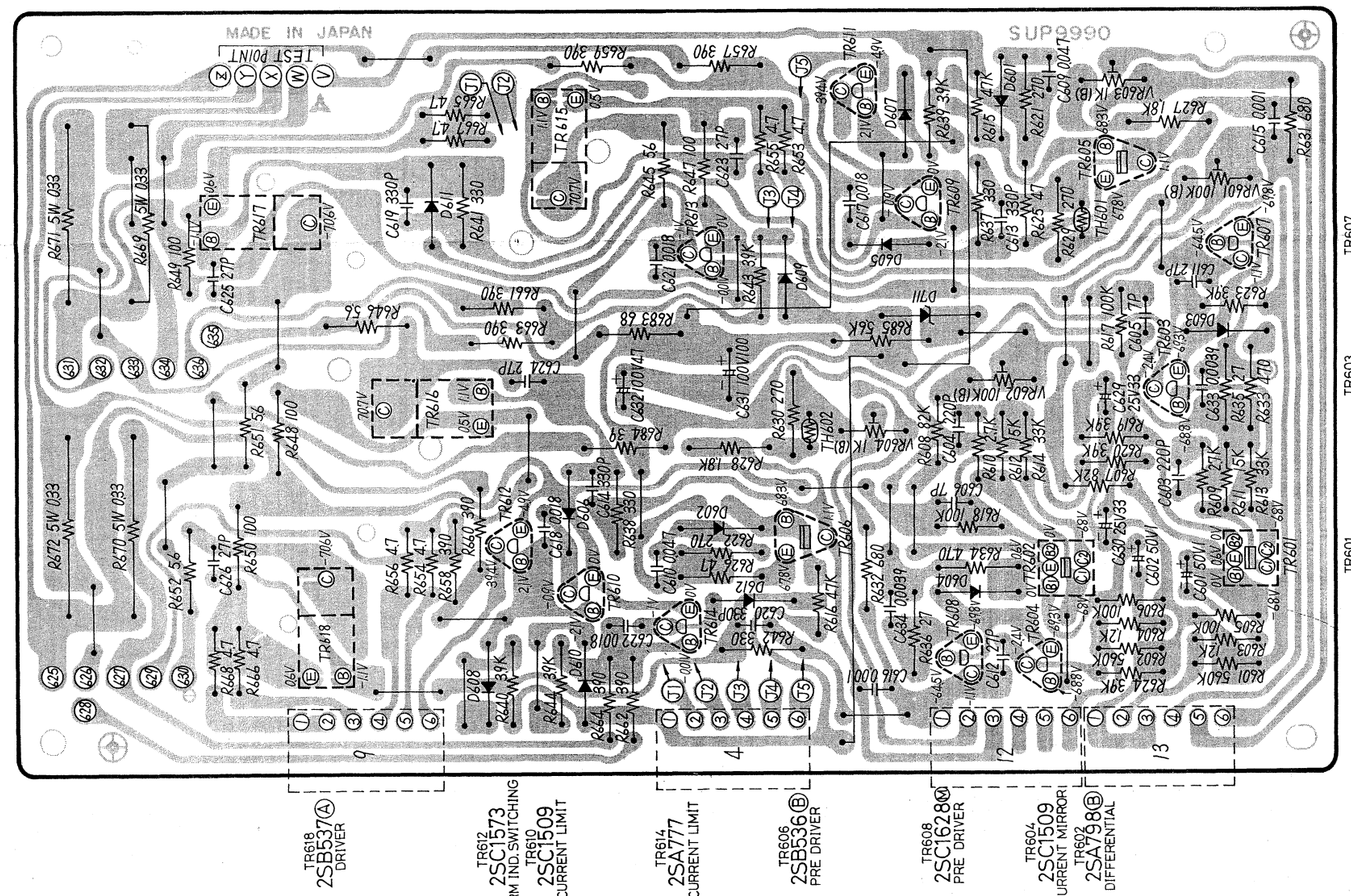

TR1 3SK40
FM RF
G1 0 V
G2 3.9 V
S 0.3 V
D 12.0 V

TR2 3SK40
FM MIX
G1 0 V
G2 0.3 V
S 0.3 V
D 12.5 V

IC1 SV1HA151
A M
1 V 18 2.7 V
2 12.2 V 19 0.4 V
3 12.2 V 10 12.2 V
4 12.2 V 11 1.5 V
5 3.5 V 12 0.7 V
6 12.5 V 13 1.4 V
7 2.1 V 14 0.3 V

TR103 2SC829
CONTROL IF
B 1.6 V
C 7.6 V
E 0.9 V

TR104 2SC829
CONTROL IF
B 5.2 V
C 11.8 V
E 4.5 V

TR4(AM SWITCHING) 2SC945
FM AM
B 0.6 V 0 V
C 0 V 0 V
E 0 V 0 V

TR105 2SC829
CONTROL IF
B 1.7 V
C 1.9 V
E 1.0 V

IC104 (FM MPX) SV1HA156
MONO STEREO
1 13.8 V 13.6 V
2 3 V 3 V
3 5.1 V 5.1 V
4 10.4 V 10.3 V
5 10.4 V 10.3 V
6 15.1 V 0.6 V
7 0 V 0 V
8 0.8 V 2.4 V
9 2.3 V 2.3 V
10 1.5 V 1.5 V
11 2.2 V 2.4 V
12 2.4 V 2.4 V
13 2.4 V 2.4 V
14 3.2 V 3.2 V

TR110 (IND. LAMP DRIVE) 2SA733
MONO STEREO
B 14.9 V 5.1 V
C 0 V 5.2 V
E 15.8 V 5.8 V

TR107 2SC945
NO-SIGNAL MUT-ON
B 0.8 V 0.7 V
C 4 V 0.1 V
E 1.3 V 0.07 V

TR108 2SC945
NO-SIGNAL MUT-ON
B 0.04 V 0.6 V
C 4.3 V 0.07 V
E 0.2 V 0.03 V

TR106 2SC829
CONTROL IF
B 2.9 V
C 13.2 V
E 2.2 V

TR3 2SC1674
FM OSC
B 2.7 V
C 9.8 V
E 2.0 V

TR5 2SK49
BUFFER
G 0 V
D 5.8 V
S 0 V

IC101 SV1AUPC555H
FM 1st IF
1 4.4 V
2 12.5 V
3 11.7 V
4 0 V
5 1.5 V
6 0 V
7 1.5 V

TR115 2SC829
BUFFER
B 4.4 V
C 12.5 V
E 3.7 V

IC102 SV1AUPC555H
FM 2nd IF
1 9.2 V
2 11.7 V
3 10.9 V
4 0 V
5 1.5 V
6 0 V
7 1.5 V

IC103 SV1AUPC577H
FM 3rd~5th IF
1 5.3 V
2 1.9 V
3 1.9 V
4 0 V
5 9.9 V
6 3.1 V
7 10.7 V

TR101 2SC829
FM MUT-ON
B 0 V 2.9 V
C 13.6 V 10.4 V
E 0 V 2.2 V

TR102 2SC829
FM MUT-ON
B 0 V 2.8 V
C 13.6 V 9.4 V
E 0 V 2.2 V

TR109 2SC945
NO-SIGNAL MUT-ON
B 0.9 V 0.04 V
C 0.3 V 9.3 V
E 0.2 V 0.03 V

TR111 2SC945
MUT-OFF MUT-ON
B 0.3 V 0.7 V
C 13.4 V 0.07 V
E 0 V 0 V

TR112 2SC945
MUT-OFF MUT-ON
B 13.8 V 12.7 V
C 13.6 V 12.2 V
E 13.4 V 12 V

SA-5760 14

■ REPLACEMENT PARTS LIST

Important Safety Notice
Components identified by shaded area have special characteristics important for safety.

Ref. No.	Part No.	Part Name & Description	Per	Remarks

■ MAIN AMPLIFIER CIRCUIT BOARD

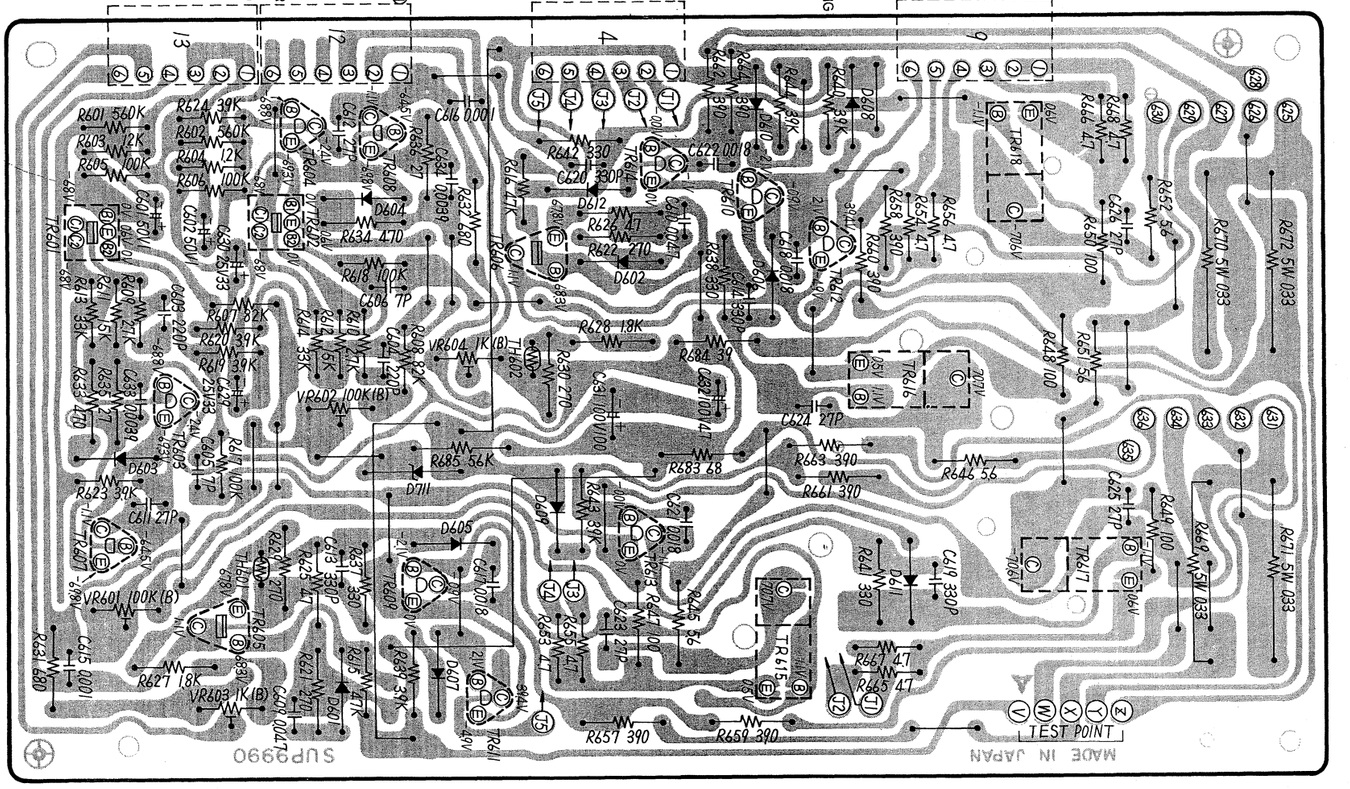

■ REPLACEMENT PARTS LIST

Important Safety Notice
Components identified by shaded area have special characteristics important for safety.
When replacing any of these components use only manufacturer's specified parts.

NOTE: 1. Part numbers are indicated on most mechanical parts.
Please use this part number for parts orders.

Ref. No.	Part No.	Part Name & Description	Per Set	Remarks
		INTEGRATED CIRCUITS		
IC1	SVIHA1151	AM RF, IF Amplifier & AM Detector	1	
IC101, 102	SVIAUPC555HF	FM IF Amplifier	2	
IC103	SVIAUPC577HF	FM IF Amplifier	1	
IC104	SVIHA1156W	FM Multiplex Circuit	1	
		TRANSISTORS		
TR1, 2	3SK40-L	FM RF Amplifier & FM Mix [FET]	2	
TR3	2SC1674-M	FM Oscillator	1	
TR4, 107, 108, 109, 111, 112	**2SC945-R**	Shock Noise & Muting Relay Switching	6	
TR5	2SK49-H1	Buffer Amplifier [FET]	1	
TR101, 102, 103, 104, 105, 106, 115	2SC829-C1	FM Control IF Amplifier	7	
TR201, 202, 203, 204	2SA902S-F	Differential Amplifier, (in ranks For G) (Use in pair ranks)	4	
TR205, 206, 505, 506, 511, 512, 708, 709, 712	**2SC1328-T**	Current Mirror AF Amplifier & Speaker Protection Switching	9	
TR207, 208, 209, 210	2SC1708-G	Equalizer Amplifier	4	
TR211, 212	2SA847-G	AF Amplifier	2	
TR110, 113, 114	2SA733-P1	Stereo Indicator Driver & AF Amp.	3	
TR501, 502, 503, 504, 713	**2SA902-F**	Differential Amplifier, (in ranks For G) (Use in pair ranks)	5	
TR507, 508	2SC1318-T	Tone Amplifier (in ranks S or T)	2	
TR509, 510	2SA720-R	Tone Amplifier (in ranks R, S or T)	2	
TR601, 602	2SA798B-F2	Differential Amplifier (in ranks F2 or G2)	2	O
TR603, 604, 509, 610, 703, 705, 710, 711	2SC1509-R	Pre Drive Amp. Current Protection, Voltage Control & Relay Driver (in rnaks Q or R)	8	
TR605, 606	2SB536B-M9	Pre Drive Amplifier (in ranks M9 or N9)	2	O
TR607, 608	2SC1628M-Y	Pre Drive Amplifier (in ranks Y or O)	2	O
TR611, 612	2SC1573-Q	Current Protection (in ranks R or Q)	2	
TR613, 614	**2SA777-Q**	Current Protection (in ranks R or Q)	2	
TR615, 616	2SD382A-L2	Drive Amplifier (in ranks L2 or M2)	2	O
TR617, 618	2SB537A-L2	Drive Amplifier (in ranks L2 or M2)	2	O
TR619, 620	**2SC828A-R**	Thermal Compensation	2	
TR621, 622, 625, 626	2SD555-Q	Power Amplifier (in ranks Q or R)	4	O
TR623, 624, 627 628	2SB600-Q	Power Amplifier (in ranks Q or R) } Use in pair ranks	4	O
TR701, 702	2SD526-O2	Voltage Control (in ranks R2, O2 or Y2)	2	O
TR704	2SA777-Q	Voltage Control (in ranks Q or R)	1	
TR707	2SD525-O	Voltage Control (in ranks R, O or Y)	1	O
		DIODES		
D101, 102	2-OA99	FM Discriminator	1pair	
D103, 104, 105, 106, 107, 108,	MA150	Muting & Meter Detector, AOC, AGC & Switching	23	

Ref. No.	Part No.	Part Name & Description	Per Set	Remarks
D109, 110, 201, 202, 601, 602, 603, 604, 605, 606, 607, 608, 609, 610, 611, 612, 714				
D203, 204, 205, 206, 207, 208	LN25D	Indicator [LED]	6	
D701	[illegible]	Rectifier	1	
D702	[illegible]	Rectifier	1	
D705	[illegible]	Rectifier	1	
D704	[illegible]	Rectifier	1	
D706	[illegible]	Rectifier & Relay Control	1	
D707	SVDMZ306	6V Zener, Voltage Stabilizer	1	O
D708	SVDMZ414	14V Zener, Voltage Stabilizer	1	
D709	SVDMZ314	14V Zener, Voltage Stabilizer	1	O
D710, 711	SVDMZ324	24V Zener, Voltage Stabilizer	2	
		COILS and TRANSFORMERS		
L1	SLAA4W1-3	FM Balun Coil	1	
L2, 4	SLAA4N11	FM Antenna Coil	2	
L3	SLDA4N21	FM Detector Coil	1	
L5	SLOA4N14	FM Oscillator Coil	1	
L6	RLO2M4P	AM Oscillator Coil	1	
L7	SLI2M401	AM IF Transformer	1	
L8	SLF2D25	AM Antenna Coil	1	O
L9	RLQY25S5	Choke Coil	1	
L102, 103, 104,	SLQX101-2D	Choke Coil	3	
L105	SLMA1Z3-K	Low Pass Filter	1	
L601, 602	SLQY16G-1U	High Character Correct Coil	2	
T1	SLIA4C101	FM 1st IF Transformer	1	
T2	RLI2M201	AM IF Transformer	1	
T3	RLI2M202	AM IF Transformer	1	
T101	SLIA4D51	FM Discriminator IF Transformer	1	
T102	SLIA4C241	Muting IF Transformer	1	
T103	SLIA42242	Muting IF Transformer	1	
T901	SLPY43	Power Transformer	1	O
		CERAMIC FILTERS		
CF103, 104, 105	SVFF10M12CGG	FM IF Circuit, 10.6MHz, Green	each 3	
	SVFF10M12CGB	FM IF Circuit, 10.65MHz, Black		
	SVFF10M12CGR	FM IF Circuit, 10.7MHz, Red		
	SVFF10M12CGW	FM IF Circuit, 10.75MHz, White		
	SVFF10M12CGY	FM IF Circuit, 10.8MHz, Yellow		
CF101	SVFF10M14GG	FM IF Circuit, 10.6MHz, Green	each 1	O
	SVFF10M14GB	FM IF Circuit, 10.65MHz, Black		
	SVFF10M14GR	FM IF Circuit, 10.7MHz, Red		
	SVFF10M14GW	FM IF Circuit, 10.75MHz, White		
	SVFF10M14GY	FM IF Circuit, 10.8MHz, Yellow		
	(Use pair ranks as same as CF101, 103, 104 and 105)			
		RESISTORS		
R1	**ERD25TJ274**	270kΩ, 1/4W, ±5%, Carbon	1	
R2	**ERD25TJ824**	820kΩ, 1/4W, ±5%, Carbon	1	
R3	**ERD25TJ101**	100Ω, 1/4W, ±5%, Carbon	1	
R4	**ERD25TJ680**	68Ω, 1/4W, ±5%, Carbon	1	

Ref. No.	Part No.	Part Name & Description	Per Set	Remarks
R578	**ERD14TSJ334**	330kΩ, 1/4W, ±5%, Carbon	1	
R581	**ERD25TJ472**	4.7kΩ, 1/4W, ±5%, Carbon	1	
R582	**ERD25TJ472**	4.7kΩ, 1/4W, ±5%, Carbon	1	
R583	**ERD25TJ224**	220kΩ, 1/4W, ±5%, Carbon	1	
R584	**ERD25TJ224**	220kΩ, 1/4W, ±5%, Carbon	1	
R585	**ERC14GK825**	8.2MΩ, 1/4W, ±10%, Solid	1	
R586	**ERC14GK825**	8.2MΩ, 1/4W, ±10%, Solid	1	
R587	**ERC14GK825**	8.2MΩ, 1/4W, ±10%, Solid	1	
R588	**ERC14GK825**	8.2MΩ, 1/4W, ±10%, Solid	1	
R589	**ERC14GK825**	8.2MΩ, 1/4W, ±10%, Solid	1	
R590	**ERC14GK825**	8.2MΩ, 1/4W, ±10%, Solid	1	
R594	**ERC14GK825**	8.2MΩ, 1/4W, ±10%, Solid	1	
R595	**ERC14GK825**	8.2MΩ, 1/4W, ±10%, Solid	1	
R596	**ERC14GK825**	8.2MΩ, 1/4W, ±10%, Solid	1	
R597	**ERC14GK825**	8.2MΩ, 1/4W, ±10%, Solid	1	
R601	**ERD25TJ564**	560kΩ, 1/4W, ±5%, Carbon	1	
R602	**ERD25TJ564**	560kΩ, 1/4W, ±5%, Carbon	1	
R603	**ERD25TJ122**	1.2kΩ, 1/4W, ±5%, Carbon	1	
R604	**ERD25TJ122**	1.2kΩ, 1/4W, ±5%, Carbon	1	
R605	**ERD25TJ104**	100kΩ, 1/4W, ±5%, Carbon	1	
R606	**ERD25TJ104**	100kΩ, 1/4W, ±5%, Carbon	1	
R607	**ERD25TJ823**	82kΩ, 1/4W, ±5%, Carbon	1	
R608	**ERD25TJ823**	82kΩ, 1/4W, ±5%, Carbon	1	
R609	**ERD25TJ272**	2.7kΩ, 1/4W, ±5%, Carbon	1	
R610	**ERD25TJ821**	820Ω, 1/4W, ±5%, Carbon	1	
R611	**ERD25TJ153**	15kΩ, 1/4W, ±5%, Carbon	1	
R612	**ERD25TJ153**	15kΩ, 1/4W, ±5%, Carbon	1	
R613	**ERD25TJ333**	33kΩ, 1/4W, ±5%, Carbon	1	
R614	**ERD25TJ153**	15kΩ, 1/4W, ±5%, Carbon	1	
R615	**ERD25TJ473**	47kΩ, 1/4W, ±5%, Carbon	1	
R616	**ERD25TJ473**	47kΩ, 1/4W, ±5%, Carbon	1	
R617	**ERD25TJ104**	100kΩ, 1/4W, ±5%, Carbon	1	
R618	**ERD25TJ104**	100kΩ, 1/4W, ±5%, Carbon	1	
R619	**ERD25TJ392**	3.9kΩ, 1/4W, ±5%, Carbon	1	
R620	**ERD25TJ392**	3.9kΩ, 1/4W, ±5%, Carbon	1	
R621	**ERD14FJ271**	270Ω, 1/4W, ±5%, Carbon	1	
R622	**ERD14FJ271**	270Ω, 1/4W, ±5%, Carbon	1	
R623	**ERD25TJ392**	3.9kΩ, 1/4W, ±5%, Carbon	1	
R624	**ERD25TJ392**	3.9kΩ, 1/4W, ±5%, Carbon	1	
R625	**ERD14FJ470**	47Ω, 1/4W, ±5%, Carbon	1	
R626	**ERD14FJ470**	47Ω, 1/4W, ±5%, Carbon	1	
R627	**ERD14FJ182**	1.8kΩ, 1/4W, ±5%, Carbon	1	
R628	**ERD14FJ182**	1.8kΩ, 1/4W, ±5%, Carbon	1	
R629	**ERD14FJ271**	270Ω, 1/4W, ±5%, Carbon	1	
R630	**ERD14FJ271**	270Ω, 1/4W, ±5%, Carbon	1	
R631	**ERD14FJ681**	680Ω, 1/4W, ±5%, Carbon	1	
R632	**ERD14FJ681**	680Ω, 1/4W, ±5%, Carbon	1	
R633	**ERD14FJ471**	470Ω, 1/4W, ±5%, Carbon	1	
R634	**ERD14FJ471**	470Ω, 1/4W, ±5%, Carbon	1	
R635	**ERD14FJ270**	27Ω, 1/4W, ±5%, Carbon	1	
R636	**ERD14FJ270**	27Ω, 1/4W, ±5%, Carbon	1	
R637	**ERD14FJ331**	330Ω, 1/4W, ±5%, Carbon	1	
R638	**ERD14FJ331**	330Ω, 1/4W, ±5%, Carbon	1	
R639	**ERD14FJ392**	3.9kΩ, 1/4W, ±5%, Carbon	1	
R640	**ERD14FJ272**	2.7kΩ, 1/4W, ±5%, Carbon	1	
R641	**ERD14FJ331**	330Ω, 1/4W, ±5%, Carbon	1	
R642	**ERD14FJ331**	330Ω, 1/4W, ±5%, Carbon	1	
R643	**ERD14FJ392**	3.9kΩ, 1/4W, ±5%, Carbon	1	
R644	**ERD14FJ272**	2.7kΩ, 1/4W, ±5%, Carbon	1	
R645	**ERD14FJ5R6**	5.6Ω, 1/4W, ±5%, Carbon	1	
R646	**ERD14FJ220**	22Ω, 1/4W, ±5%, Carbon	1	

Ref. No.	Part No.	Part Name & Description	Per Set	Remarks
R647	**ERD14FJ101**	100Ω, 1/4W, ±5%, Carbon	1	
R648	**ERD14FJ101**	100Ω, 1/4W, ±5%, Carbon	1	
R649	**ERD14FJ101**	100Ω, 1/4W, ±5%, Carbon	1	
R650	**ERD14FJ101**	100Ω, 1/4W, ±5%, Carbon	1	
R651	**ERD14FJ5R6**	5.6Ω, 1/4W, ±5%, Carbon	1	
R652	**ERD14FJ220**	22Ω, 1/4W, ±5%, Carbon	1	
R653	**ERD25TJ4R7**	4.7Ω, 1/4W, ±5%, Carbon	1	
R654	**ERD25TJ4R7**	4.7Ω, 1/4W, ±5%, Carbon	1	
R655	**ERD25TJ4R7**	4.7Ω, 1/4W, ±5%, Carbon	1	
R656	**ERD25TJ4R7**	4.7Ω, 1/4W, ±5%, Carbon	1	
R657	**ERD14FJ391**	390Ω, 1/4W, ±5%, Carbon	1	
R658	**ERD14FJ391**	390Ω, 1/4W, ±5%, Carbon	1	
R659	**ERD14FJ391**	390Ω, 1/4W, ±5%, Carbon	1	
R660	**ERD14FJ391**	390Ω, 1/4W, ±5%, Carbon	1	
R661	**ERD14FJ391**	390Ω, 1/4W, ±5%, Carbon	1	
R662	**ERD14FJ391**	390Ω, 1/4W, ±5%, Carbon	1	
R663	**ERD14FJ391**	390Ω, 1/4W, ±5%, Carbon	1	
R664	**ERD14FJ391**	390Ω, 1/4W, ±5%, Carbon	1	
R665	**ERD25TJ4R7**	4.7Ω, 1/4W, ±5%, Carbon	1	
R666	**ERD25TJ4R7**	4.7Ω, 1/4W, ±5%, Carbon	1	
R667	**ERD25TJ4R7**	4.7Ω, 1/4W, ±5%, Carbon	1	
R668	**ERD25TJ4R7**	4.7Ω, 1/4W, ±5%, Carbon	1	
R669	ERF5AKR33	0.33Ω, 5W, ±10%, Non-Flammable Wire	1	○
R670	ERF5AKR33	0.33Ω, 5W, ±10%, Non-Flammable Wire	1	○
R671	ERF5AKR33	0.33Ω, 5W, ±10%, Non-Flammable Wire	1	○
R672	ERF5AKR33	0.33Ω, 5W, ±10%, Non-Flammable Wire	1	○
R673	ERQ3CJ100	10Ω, 3W, ±5%, Fuse Type Metallic	1	○
R674	ERQ3CJ100	10Ω, 3W, ±5%, Fuse Type Metallic	1	○
R675	**ERX2ANJ3R3**	3.3Ω, 2W, ±5%, Metallic	1	
R676	**ERX2ANJ3R3**	3.3Ω, 2W, ±5%, Metallic	1	
R677	ERF5AKR33	0.33Ω, 5W, ±10%, Non-Flammable Wire	1	○
R678	ERF5AKR33	0.33Ω, 5W, ±10%, Non-Flammable Wire	1	○
R679	ERF5AKR33	0.33Ω, 5W, ±10%, Non-Flammable Wire	1	○
R680	ERF5AKR33	0.33Ω, 5W, ±10%, Non-Flammable Wire	1	○
R681	**ERG3ANJ471**	470Ω, 3W, ±5%, Metallic	1	
R682	**ERG3ANJ471**	470Ω, 3W, ±5%, Metallic	1	
R683	**ERD14FJ680**	68Ω, 1/4W, ±5%, Carbon	1	
R684	**ERD14FJ390**	39Ω, 1/4W, ±5%, Carbon	1	
R685	ERD12FJ562	5.6kΩ, 1/2W, ±5%, Carbon	1	
R686	**ERD25TJ223**	22kΩ, 1/4W, ±5%, Carbon	1	
R687	**ERD25TJ223**	22kΩ, 1/4W, ±5%, Carbon	1	
R703	**ERD25TJ183**	18kΩ, 1/4W, ±5%, Carbon	1	
R704	**ERD14FJ821**	820Ω, 1/4W, ±5%, Carbon	1	
R705	ERD12TSJ103	10kΩ, 1/2W, ±5%, Carbon	1	
R706	**ERD25TJ103**	10kΩ, 1/4W, ±5%, Carbon	1	
R708	**ERF5SJ271**	270Ω, 5W, ±5%, Non-Flammable Wire	1	
R709	**ERD18FJ4R7**	4.7Ω, 1/8W, ±5%, Carbon	1	
R710	**ERG1ANJ331**	330Ω, 1W, ±5%, Carbon	1	
R711	**ERD25TJ151**	150Ω, 1/4W, ±5%, Carbon	1	
R712	**ERD25TJ393**	39kΩ, 1/4W, ±5%, Carbon	1	
R713	**ERD25TJ103**	10kΩ, 1/4W, ±5%, Carbon	1	
R714	ERD12TSJ103	10kΩ, 1/2W, ±5%, Carbon	1	
R715	ERD12FJ472	4.7kΩ, 1/2W, ±5%, Carbon	1	
R716	**ERD14FJ102**	1kΩ, 1/4W, ±5%, Carbon	1	
R717	**ERD14FJ102**	1kΩ, 1/4W, ±5%, Carbon	1	
R718	**ERD18FJ4R7**	4.7Ω, 1/8W, ±5%, Carbon	1	
R719	**ERD25TJ393**	39kΩ, 1/4W, ±5%, Carbon	1	
R720	**ERD25TJ272**	2.7kΩ, 1/4W, ±5%, Carbon	1	
R721	**ERD25TJ183**	18kΩ, 1/4W, ±5%, Carbon	1	
R723	**ERD25TJ333**	33kΩ, 1/4W, ±5%, Carbon	1	
R724	**ERD25TJ333**	33kΩ, 1/4W, ±5%, Carbon	1	

Ref. No.	Part No.	Part Name & Description	Per Set	Remarks
R726	**ERG2ANJ122**	1.2kΩ, 2W, ±5%, Metallic	1	
R727	**ERD25TJ683**	68kΩ, 1/4W, ±5%, Carbon	1	
R728	**ERD25TJ123**	12kΩ, 1/4W, ±5%, Carbon	1	
R729	**ERD25TJ822**	8.2kΩ, 1/4W, ±5%, Carbon	1	
R730	**ERD25TJ333**	33kΩ, 1/4W, ±5%, Carbon	1	
R731	**ERD25TJ104**	100kΩ, 1/4W, ±5%, Carbon	1	
R732	**ERD25TJ684**	680kΩ, 1/4W, ±5%, Carbon	1	
R733	**ERD25TJ683**	68kΩ, 1/4W, ±5%, Carbon	1	
R734	**ERD25TJ271**	270Ω, 1/4W, ±5%, Carbon	1	
R735	**ERD25TJ103**	10kΩ, 1/4W, ±5%, Carbon	1	
R736	**ERD25TJ223**	22kΩ, 1/4W, ±5%, Carbon	1	
R737	**ERD25TJ822**	8.2kΩ, 1/4W, ±5%, Carbon	1	
R738	**ERD25TJ184**	180kΩ, 1/4W, ±5%, Carbon	1	
R739	**ERD25TJ333**	33kΩ, 1/4W, ±5%, Carbon	1	
R740	ERD12FJ472	4.7kΩ, 1/2W, ±5%, Carbon	1	
R741	ERD12FJ100	10Ω, 1/2W, ±5%, Carbon	1	
R742	**ERG1ANJ102**	1kΩ, 1W, ±5%, Carbon	1	
			1	
R744	ERD12FJ122	1.2kΩ, 1/2W, ±5%, Carbon	1	
R745	**ERD14FJ821**	820Ω, 1/4W, ±5%, Carbon	1	
R746	**ERD14FJ222**	2.2kΩ, 1/4W, ±5%, Carbon	1	
R747	**ERD14FJ121**	120Ω, 1/4W, ±5%, Carbon	1	
R748	**ERD14FJ121**	120Ω, 1/4W, ±5%, Carbon	1	
R749	**ERD25TJ153**	15kΩ, 1/4W, ±5%, Carbon	1	
R750	**ERD14FJ180**	18Ω, 1/4W, ±5%, Carbon	1	
R751	**ERD25TJ224**	220kΩ, 1/4W, ±5%, Carbon	1	
R752	**ERD25TJ332**	3.3kΩ, 1/4W, ±5%, Carbon	1	
R801	**ERG3ANJ100**	10Ω, 3W, ±5%, Metallic	1	
R802	**ERG3ANJ100**	10Ω, 3W, ±5%, Metallic	1	
			1	
		VARIABLE RESISTORS		
VR101, 102	EVLS3AA00B54	50kΩ(B), Muting & Meter Adjustment	2	
VR103, 104	EVLS3AA00B14	10kΩ(B), VCO & Separation Adjustment	2	
VR601, 602	EVLSOAA00B15	100kΩ(B), DC Unbalance Adjustment	2	
VR602, 603	EVLSOAA00B13	1kΩ(B), Ico Adjustment	2	
VR701	EVLSOAA00B23	2kΩ(B), Voltage Adjustment	1	
VR501	EVK7RA031252	250kΩ(BH), Balance Control	1	○
VR502	EWCF2AF30ATC	150kΩ, Volume Control [ATT]	1	
VR503, 504	EWF2WA037C15	100kΩ(C), Bass & Treble Control	2	
		THERMISTORS		
TH1, 601, 602	RRT251	Thermistor, Thermal Compensator	3	
		CAPACITORS		
C1	ECCD1H070DC	7pF, 50WV, ±0.5pF, Ceramic	1	
C2	ECQM05473KZ	0.047μF, 50WV, ±10%, Polyester	1	
C3	ECKD1H102MD	0.001μF, 50WV, ±20%, Ceramic	1	
C4	ECKD1H102PF	0.001μF 50WV, +100% −0%, Ceramic	1	
C5	ECCD1H100KR	100pF, 50WV, ±10%, Ceramic	1	
C6	ECKD1H102MD	0.001μF, 50WV, ±20%, Ceramic	1	
C7	ECCD1H070DC	7pF, 50WV, ±0.5pF, Ceramic	1	
C8	ECKD1H103MD	0.01μF, 50WV, ±20%, Ceramic	1	
C9	ECCD1H030CC	3pF, 50WV, ±0.25pF, Ceramic	1	
C10	ECKD1H103MD	0.01μF, 50WV, ±20%, Ceramic	1	
C11	ECCD1H150KR	15pF, 50WV, ±10%, Ceramic	1	
C12	ECCD1H100KC	10pF, 50WV, ±10%, Ceramic	1	
C13	ECCD1H390KC	39pF, 50WV, ±10%, Ceramic	1	

Ref. No.	Part No.	Part Name & Description	Per Set	Remarks
C14	ECCD1H120KC	12pF, 50WV, ±10%, Ceramic	1	
C15	ECKD1H102MD	0.001μF, 50WV, ±20%, Ceramic	1	
C16	ECKD1H103MD	0.01μF, 50WV, ±20%, Ceramic	1	
C17	ECCD1H180KC	18pF, 50WV, ±10%, Ceramic	1	
C18	ECKD1H103MD	0.01μF, 50WV, ±20%, Ceramic	1	
C19	ECKD1H103PF	0.01μF 50WV, +100% −0%, Ceramic	1	
C20	ECQS1361JZ	360pF, 125WV, ±5%, Styrol	1	
C21	**ECEA16V10V**	10μF, 16WV, Electrolytic	1	
C22	ECKD1H103PF	0.01μF, 50WV, +100% −0%, Ceramic	1	
			1	
C24	**ECEA50V3R3V**	3.3μF, 50WV, Electrolytic	1	
C25	**ECEA50V1V**	1μF, 50WV, Electrolytic	1	
C26	**ECEA50V3R3V**	3.3μF, 50WV, Electrolytic	1	
C27	ECKD1H102MD	0.001μF, 50WV, ±20%, Ceramic	1	
C28	ECKD1H103PF	0.01μF, 50WV, +100% −0%, Ceramic	1	
C29	**ECEA16V10V**	10μF, 16WV, Electrolytic	1	
C30	**ECEA50V1V**	1μF, 50WV, Electrolytic	1	
C31	ECKD1H103PF	0.01μF, 50WV, +100% −0%, Ceramic	1	
C32	ECKD1H102PF	0.001μF, 50WV, +100% −0%, Ceramic	1	
C33	ECCD1H101K	100pF, 50WV, ±10%, Ceramic	1	
C101	ECKD1H223PF	0.022μF, 50WV, +100% −0%, Ceramic	1	
C102	ECKD1H223PF	0.022μF, 50WV, +100% −0%, Ceramic	1	
C103	ECKD1H223PF	0.022μF, 50WV, +100% −0%, Ceramic	1	
C104	ECKD1H223PF	0.022μF, 50WV, +100% −0%, Ceramic	1	
C105	ECCD1H180KC	18pF, 50WV, ±10%, Ceramic	1	
C106	ECKD1H102PF	0.001μF, 50WV, +100% −0%, Ceramic	1	
C107	ECKD1H223PF	0.022μF, 50WV, +100% −0%, Ceramic	1	
C108	ECKD1H223PF	0.022μF, 50WV, +100% −0%, Ceramic	1	
C109	ECKD1H223PF	0.022μF 50WV, +100% −0%, Ceramic	1	
C110	ECKD1H223PF	0.022μF, 50WV, +100% −0%, Ceramic	1	
C111	ECKD1H223PF	0.022μF, 50WV, +100% −0%, Ceramic	1	
C112	ECCD1H100KU	10pF, 50WV, ±10%, Ceramic	1	
C113	ECCD1H560K	56pF, 50WV, ±10%, Ceramic	1	
C114	ECKD1H223PF	0.022μF, 50WV, +100% −0%, Ceramic	1	
C115	ECKD1H223PF	0.022μF, 50WV, +100% −0%, Ceramic	1	
C116	ECKD1H103PF	0.01μF, 50WV, +100% −0%, Ceramic	1	
C117	ECKD1H223PF	0.022μF, 50WV, +100% −0%, Ceramic	1	
C118	**ECEA16V10V**	10μF, 16WV, Electrolytic	1	
C119	ECKD1H103PF	0.01μF, 50WV, +100% −0%, Ceramic	1	
C120	**ECEA35V4R7V**	4.7μF, 35WV, Electrolytic	1	
C121	ECCD1H101K	100pF, 50WV, ±10%, Ceramic	1	
C122	ECCD1H221K	220pF, 50WV, ±10%, Ceramic	1	
C123	ECKD1H103PF	0.01μF, 50WV, +100% −0%, Ceramic	1	
C124	**ECEA10V100V**	100μF, 10WV, Electrolytic	1	
C125	ECQM05223KZ	0.022μF, 50WV, ±10%, Polyester	1	
C126	ECKD1H223PF	0.022μF, 50WV, +100% −0%, Ceramic	1	
C127	ECCD1H180KC	18pF, 50WV, ±10%, Ceramic	1	
C128	ECKD1H103PF	0.01μF, 50WV, +100% −0%, Ceramic	1	
C129	ECKD1H102PF	0.001μF, 50WV, +100% −0%, Ceramic	1	
C130	ECKD1H223PF	0.022μF, 50WV, +100% −0%, Ceramic	1	
C131	ECKD1H223PF	0.022μF, 50WV, +100% −0%, Ceramic	1	
C132	ECKD1H223PF	0.022μF, 50WV, +100% −0%, Ceramic	1	
C133	ECCD1H150KC	15pF, 50WV, ±10%, Ceramic	1	
C134	ECKD1H103PF	0.01μF, 50WV, +100% −0%, Ceramic	1	
C135	ECKD1H223PF	0.022μF, 50WV, +100% −0%, Cermaic	1	
C136	**ECEA50V3R3V**	3.3μF, 50WV, Electrolytic	1	
C137	ECKD1H223PF	0.022μF, 50WV, +100% −0%, Ceramic	1	
C138	ECKD1H102PF	0.001μF, 50WV, +100% −0%, Ceramic	1	
C139	ECKD1H223PF	0.022μF, 50WV, +100% −0%, Ceramic	1	
C140	ECKD1H103PF	0.01μF, 50WV, +100% −0%, Ceramic	1	
C141	**ECEA50V1V**	1μF, 50WV, Electrolytic	1	

R643	**ERD14FJ332**	3.3kΩ,	1/4W,	±5%,	Carbon	1	
R644	**ERD14FJ272**	2.7kΩ,	1/4W,	±5%,	Carbon	1	
R645	**ERD14FJ5R6**	5.6Ω,	1/4W,	±5%,	Carbon	1	
R646	**ERD14FJ220**	22Ω,	1/4W,	±5%,	Carbon	1	

R720	**ERD25TJ272**	2.7kΩ,	1/4W,	±5%,	Carbon	1	
R721	**ERD25TJ183**	18kΩ,	1/4W,	±5%,	Carbon	1	
R723	**ERD25TJ333**	33kΩ,	1/4W,	±5%,	Carbon	1	
R724	**ERD25TJ333**	33kΩ,	1/4W,	±5%,	Carbon	1	

Ref. No.	Part No.	Part Name & Description				Per Set	Remarks
R726	**ERG2ANJ122**	1.2kΩ,	2W,	±5%,	Metallic	1	
R727	**ERD25TJ683**	68kΩ,	1/4W,	±5%,	Carbon	1	
R728	**ERD25TJ123**	12kΩ,	1/4W,	±5%,	Carbon	1	
R729	**ERD25TJ822**	8.2kΩ,	1/4W,	±5%,	Carbon	1	
R730	**ERD25TJ333**	33kΩ,	1/4W,	±5%,	Carbon	1	
R731	**ERD25TJ104**	100kΩ,	1/4W,	±5%,	Carbon	1	
R732	**ERD25TJ684**	680kΩ,	1/4W,	±5%,	Carbon	1	
R733	**ERD25TJ683**	68kΩ,	1/4W,	±5%,	Carbon	1	
R734	**ERD25TJ271**	270Ω,	1/4W,	±5%,	Carbon	1	
R735	**ERD25TJ103**	10kΩ,	1/4W,	±5%,	Carbon	1	
R736	**ERD25TJ223**	22kΩ,	1/4W,	±5%,	Carbon	1	
R737	**ERD25TJ822**	8.2kΩ,	1/4W,	±5%,	Carbon	1	
R738	**ERD25TJ184**	180kΩ,	1/4W,	±5%,	Carbon	1	
R739	**ERD25TJ333**	33kΩ,	1/4W,	±5%,	Carbon	1	
R740	ERD12FJ472	4.7kΩ,	1/2W,	±5%,	Carbon	1	
R741	ERD12FJ100	10Ω,	1/2W,	±5%,	Carbon	1	
R742	**ERG1ANJ102**	1kΩ,	1W,	±5%,	Carbon	1	
						1	
R744	ERD12FJ122	1.2kΩ,	1/2W,	±5%,	Carbon	1	
R745	**ERD14FJ821**	820Ω,	1/4W,	±5%,	Carbon	1	
R746	**ERD14FJ222**	2.2kΩ,	1/4W,	±5%,	Carbon	1	
R747	**ERD14FJ121**	120Ω,	1/4W,	±5%,	Carbon	1	
R748	**ERD14FJ121**	120Ω,	1/4W,	±5%,	Carbon	1	
R749	**ERD25TJ153**	15kΩ,	1/4W,	±5%,	Carbon	1	
R750	**ERD14FJ180**	18Ω,	1/4W,	±5%,	Carbon	1	
R751	**ERD25TJ224**	220kΩ,	1/4W,	±5%,	Carbon	1	
R752	**ERD25TJ332**	3.3kΩ,	1/4W,	±5%,	Carbon	1	
R801	**ERG3ANJ100**	10Ω,	3W,	±5%,	Metallic	1	
R802	**ERG3ANJ100**	10Ω,	3W,	±5%,	Metallic	1	
						1	
		VARIABLE RESISTORS					
VR101, 102	EVLS3AA00B54	50kΩ(B), Muting & Meter Adjustment				2	
VR103, 104	EVLS3AA00B14	10kΩ(B), VCO & Separation Adjustment				2	
VR601, 602	EVLSOAA00B15	100kΩ(B), DC Unbalance Adjustment				2	
VR602, 603	EVLSOAA00B13	1kΩ(B), Ico Adjustment				2	
VR701	EVLSOAA00B23	2kΩ(B), Voltage Adjustment				1	
VR501	EVK7RA031252	250kΩ(BH), Balance Control				1	O
VR502	EWCF2AF30ATC	150kΩ, Volume Control [ATT]				1	
VR503, 504	EWF2WA037C15	100kΩ(C), Bass & Treble Control				2	
		THERMISTORS					
TH1, 601, 602	RRT251	Thermistor, Thermal Compensator				3	
		CAPACITORS					
C1	ECCD1H070DC	7pF,	50WV,	±0.5pF,	Ceramic	1	
C2	ECQM05473KZ	0.047μF,	50WV,	±10%,	Polyester	1	
C3	ECKD1H102MD	0.001μF,	50WV,	±20%,	Ceramic	1	
C4	ECKD1H102PF	0.001μF	50WV,	+100 −0 %,	Ceramic	1	
C5	ECCD1H100KR	100pF,	50WV,	±10%,	Ceramic	1	
C6	ECKD1H102MD	0.001μF,	50WV,	±20%,	Ceramic	1	
C7	ECCD1H070DC	7pF,	50WV,	±0.5pF,	Ceramic	1	
C8	ECKD1H103MD	0.01μF,	50WV,	±20%,	Ceramic	1	
C9	ECCD1H030CC	3pF,	50WV,	±0.25pF,	Ceramic	1	
C10	ECKD1H103MD	0.01μF,	50WV,	±20%,	Ceramic	1	
C11	ECCD1H150KR	15pF,	50WV,	±10%,	Ceramic	1	
C12	ECCD1H100KC	10pF,	50WV,	±10%,	Ceramic	1	
C13	ECCD1H390KC	39pF,	50WV,	±10%,	Ceramic	1	

Ref. No.	Part No.	Part Name & Description				Per Set	Remarks
C14	ECCD1H120KC	12pF,	50WV,	±10%,	Ceramic	1	
C15	ECKD1H102MD	0.001μF,	50WV,	±20%,	Ceramic	1	
C16	ECKD1H103MD	0.01μF,	50WV,	±20%,	Ceramic	1	
C17	ECCD1H180KC	18pF,	50WV,	±10%,	Ceramic	1	
C18	ECKD1H103MD	0.01μF,	50WV,	±20%,	Ceramic	1	
C19	ECKD1H103PF	0.01μF	50WV,	+100 −0 %,	Ceramic	1	
C20	ECQS1361JZ	360pF,	125WV,	±5%,	Styrol	1	
C21	**ECEA16V10V**	10μF,	16WV,		Electrolytic	1	
C22	ECKD1H103PF	0.01μF,	50WV,	+100 −0 %,	Ceramic	1	
						1	
C24	**ECEA50V3R3V**	3.3μF,	50WV,		Electrolytic	1	
C25	**ECEA50V1V**	1μF,	50WV,		Electrolytic	1	
C26	**ECEA50V3R3V**	3.3μF,	50WV,		Electrolytic	1	
C27	ECKD1H102MD	0.001μF,	50WV,	±20%,	Ceramic	1	
C28	ECKD1H103PF	0.01μF,	50WV,	+100 −0 %,	Ceramic	1	
C29	**ECEA16V10V**	10μF,	16WV,		Electrolytic	1	
C30	**ECEA50V1V**	1μF,	50WV,		Electrolytic	1	
C31	ECKD1H103PF	0.01μF,	50WV,	+100 −0 %,	Ceramic	1	
C32	ECKD1H102PF	0.001μF,	50WV,	+100 −0 %,	Ceramic	1	
C33	ECCD1H101K	100pF,	50WV,	±10%,	Ceramic	1	
C101	ECKD1H223PF	0.022μF,	50WV,	+100 −0 %,	Ceramic	1	
C102	ECKD1H223PF	0.022μF,	50WV,	+100 −0 %,	Ceramic	1	
C103	ECKD1H223PF	0.022μF,	50WV,	+100 −0 %,	Ceramic	1	
C104	ECKD1H223PF	0.022μF,	50WV,	+100 −0 %,	Ceramic	1	
C105	ECCD1H180KC	18pF,	50WV,	±10%,	Ceramic	1	
C106	ECKD1H102PF	0.001μF,	50WV,	+100 −0 %,	Ceramic	1	
C107	ECKD1H223PF	0.022μF,	50WV,	+100 −0 %,	Ceramic	1	
C108	ECKD1H223PF	0.022μF,	50WV,	+100 −0 %,	Ceramic	1	
C109	ECKD1H223PF	0.022μF	50WV,	+100 −0 %,	Ceramic	1	
C110	ECKD1H223PF	0.022μF,	50WV,	+100 −0 %,	Ceramic	1	
C111	ECKD1H223PF	0.022μF,	50WV,	+100 −0 %,	Ceramic	1	
C112	ECCD1H100KU	10pF,	50WV,	±10%,	Ceramic	1	
C113	ECCD1H560K	56pF,	50WV,	±10%,	Ceramic	1	
C114	ECKD1H223PF	0.022μF,	50WV,	+100 −0 %,	Ceramic	1	
C115	ECKD1H223PF	0.022μF,	50WV,	+100 −0 %,	Ceramic	1	
C116	ECKD1H103PF	0.01μF,	50WV,	+100 −0 %,	Ceramic	1	
C117	ECKD1H223PF	0.022μF,	50WV,	+100 −0 %,	Ceramic	1	
C118	**ECEA16V10V**	10μF,	16WV,		Electrolytic	1	
C119	ECKD1H103PF	0.01μF,	50WV,	+100 −0 %,	Ceramic	1	
C120	**ECEA35V4R7V**	4.7μF,	35WV,		Electrolytic	1	
C121	ECCD1H101K	100pF,	50WV,	±10%,	Ceramic	1	
C122	ECCD1H221K	220pF,	50WV,	±10%,	Ceramic	1	
C123	ECKD1H103PF	0.01μF,	50WV,	+100 −0 %,	Ceramic	1	
C124	**ECEA10V100V**	100μF,	10WV,		Electrolytic	1	
C125	ECQM05223KZ	0.022μF,	50WV,	±10%,	Polyester	1	
C126	ECKD1H223PF	0.022μF,	50WV,	+100 −0 %,	Ceramic	1	
C127	ECCD1H180KC	18pF,	50WV,	±10%,	Ceramic	1	
C128	ECKD1H103PF	0.01μF,	50WV,	+100 −0 %,	Ceramic	1	
C129	ECKD1H102PF	0.001μF,	50WV,	+100 −0 %,	Ceramic	1	
C130	ECKD1H223PF	0.022μF,	50WV,	+100 −0 %,	Ceramic	1	
C131	ECKD1H223PF	0.022μF,	50WV,	+100 −0 %,	Ceramic	1	
C132	ECKD1H223PF	0.022μF,	50WV,	+100 −0 %,	Ceramic	1	
C133	ECCD1H150KC	15pF,	50WV,	±10%,	Ceramic	1	
C134	ECKD1H103PF	0.01μF,	50WV,	+100 −0 %,	Ceramic	1	
C135	ECKD1H223PF	0.022μF,	50WV,	+100 −0 %,	Cermaic	1	
C136	**ECEA50V3R3V**	3.3μF,	50WV,		Electrolytic	1	
C137	ECKD1H223PF	0.022μF,	50WV,	+100 −0 %,	Ceramic	1	
C138	ECKD1H102PF	0.001μF,	50WV,	+100 −0 %,	Ceramic	1	
C139	ECKD1H223PF	0.022μF,	50WV,	+100 −0 %,	Ceramic	1	
C140	ECKD1H103PF	0.01μF,	50WV,	+100 −0 %,	Ceramic	1	
C141	**ECEA50V1V**	1μF,	50WV,		Electrolytic	1	

Ref. No.	Part No.	Part Name & Description				Per Set	Remarks
C144	**ECEA16V100V**	100μF,	16WV,		Electrolytic	1	
C145	**ECEA16V470V**	470μF,	16WV,		Electrolytic	1	
C146	**ECEA35V4R7V**	4.7μF,	35WV,		Electrolytic	1	
C147	ECQM05473KZ	0.047μF,	50WV,	±10%,	Polyester	1	
C148	ECQS1471JZ	470pF,	125WV,	±5%,	Styrol	1	
C149	ECEA50MR22R	0.22μF,	50WV,		Electrolytic	1	
C150	ECEA50MR47R	0.47μF,	50WV,		Electrolytic	1	
C151	ECEA50MR22R	0.22μF,	50WV,		Electrolytic	1	
C152	**ECEA16V33V**	33μF,	16WV,		Electrolytic	1	
C153	ECKD1H103PF	0.01μF,	50WV,	+100 −0 %,	Ceramic	1	
C154	**ECEA16V10V**	10μF,	16WV,		Electrolytic	1	
C155	**ECEA16V47V**	47μF,	16WV,		Electrolytic	1	
C162	ECQM05103KZ	0.01μF,	50WV,	±10%,	Polyester	1	
C163	ECQM05183JZ	0.018μF,	50WV,	±5%,	Polyester	1	
C164	ECQM05183JZ	0.018μF,	50WV,	±5%,	Polyester	1	
C165	**ECEA35V3R3V**	3.3μF,	35WV,		Electrolytic	1	
C166	**ECEA35V3R3V**	3.3μF	35WV,		Electrolytic	1	
C167	ECEA50M3R3R	3.3μF,	50WV,		Electrolytic	1	
C168	ECEA50M3R3R	3.3μF,	50WV,		Electrolytic	1	
C169	ECEA50M1R	1μF,	50WV,		Electrolytic	1	
C170	ECEA50M1R	1μF,	50WV,		Electrolytic	1	
C171	**ECEA50V1V**	1μF,	50WV,		Electrolytic	1	
C172	**ECEA16V47V**	47μF,	16WV,		Electrolytic	1	
C173	**ECEA35V4R7V**	4.7μF,	35WV,		Electrolytic	1	
C174	ECQM05223KZ	0.022μF,	50WV,	±10%,	Polyester	1	
C201	ECEA50M3R3R	3.3μF,	50WV,		Electrolytic	1	
C202	ECEA50M3R3R	3.3μF,	50WV,		Electrolytic	1	
C203	ECCD1H470K	47pF,	50WV,	±10%,	Ceramic	1	
C204	ECCD1H470K	47pF,	50WV,	±10%,	Ceramic	1	
C205	ECKD2H331KB	330pF,	500WV,	±10%,	Ceramic	1	
C206	ECKD2H331KB	330pF,	500WV,	±10%,	Ceramic	1	
C207	ECCD1H151K	150pF,	50WV,	±10%,	Ceramic	1	
C208	ECCD1H151K	150pF,	50WV,	±10%,	Ceramic	1	
C209	ECQS05471JZG	470pF,	50WV,	±5%,	Styrol	1	
C210	ECQS05471JZG	470pF,	50WV,	±5%,	Styrol	1	
C211	ECQF1472GZ	0.0047μF,	125WV,	±2%,	Polypropylene	1	
C212	ECQF1472GZ	0.0047μF,	125WV,	±2%,	Polypropylene	1	
C213	**ECEA16V220V**	220μF,	16WV,		Electrolytic	1	
C214	**ECEA16V220V**	220μF,	16WV,		Electrolytic	1	
C215	ECQF1183GZ	0.018μF,	125WV,	±2%	Polypropylene	1	
C216	ECQF1183GZ	0.018μF,	125WV,	±2%,	Polypropylene	1	
C217	ECQM05102JZ	0.001μF,	50WV,	±5%,	Polyester	1	
C218	ECQM05102JZ	0.001μF,	50WV,	±5%,	Polyester	1	
C219	ECKD2H821KB	820pF,	500WV,	±10%,	Ceramic	1	
C220	ECKD2H821KB	820pF,	500WV,	±10%,	Ceramic	1	
C221	ECQM05103KZ	0.01μF,	50WV,	±10%,	Polyester	1	
C222	ECQM05103KZ	0.01μF,	50WV,	±10%,	Polyester	1	
C223	**ECEA16V33V**	33μF,	16WV,		Electrolytic	1	
C224	**ECEA16V33V**	33μF,	16WV,		Electrolytic	1	
C225	ECQM05682JZ	0.0068μF,	50WV,	±5%,	Polyester	1	
C226	ECQM05682JZ	0.0068μF,	50WV,	±5%,	Polyester	1	
C227	**ECEA50N1**	1μF,	50WV,	Non-Polar	Electrolytic	1	
C228	**ECEA50N1**	1μF,	50WV,	Non-Polar	Electrolytic	1	
C231	**ECEA35V4R7V**	4.7μF,	35WV,		Electrolytic	1	
C232	**ECEA35V4R7V**	4.7μF,	35WV,		Electrolytic	1	
C501	ECQM05104KZ	0.1μF,	50WV,	±10%,	Polyester	1	
C502	ECQM05104KZ	0.1μF,	50WV,	±10%,	Polyester	1	
C503	ECEA50MR68R	0.68μF,	50WV,		Electrolytic	1	
C504	ECEA50MR68R	0.68μF,	50WV,		Electrolytic	1	

Ref. No.	Part No.	Part Name & Description				Per Set	Remarks
C505	ECCD1H100K	10pF,	50WV,	±10%,	Ceramic	1	
C506	ECCD1H100K	10pF,	50WV,	±10%,	Ceramic	1	
C507	**ECEA35V4R7V**	4.7μF,	35WV,		Electrolytic	1	
C508	**ECEA35V4R7V**	4.7μF,	35WV,		Electrolytic	1	
C509	**ECEA50V1V**	1μF,	50WV,		Electrolytic	1	
C510	**ECEA50V1V**	1μF,	50WV,		Electrolytic	1	
C511	**ECEA16V47V**	47μF,	16WV,		Electrolytic	1	
C512	**ECEA16V47V**	47μF,	16WV,		Electrolytic	1	
C513	**ECEA16V33V**	33μF,	16WV,		Electrolytic	1	
C514	**ECEA16V33V**	33μF,	16WV,		Electrolytic	1	
C515	**ECEA16N4R7**	4.7μF,	16WV,	Non-Polar	Electrolytic	1	
C516	**ECEA16N4R7**	4.7μF,	16WV,	Non-Polar	Electrolytic	1	
C517	ECKD2H821KB	820pF,	500WV,	±10%,	Ceramic	1	
C518	ECKD2H821KB	820pF,	500WV,	±10%,	Ceramic	1	
C519	ECKD2H821KB	820pF,	500WV,	±10%,	Ceramic	1	
C520	ECKD2H821KB	820pF,	500WV,	±10%,	Ceramic	1	
C521	ECQM05562JZ	0.0056μF,	50WV,	±5%,	Polyester	1	
C522	ECQM05562JZ	0.0056μF,	50WV,	±5%,	Polyester	1	
C523	ECQM05562JZ	0.0056μF,	50WV,	±5%,	Polyester	1	
C524	ECQM05562JZ	0.0056μF,	50WV,	±5%,	Polyester	1	
C525	ECCD1H120K	12pF,	50WV,	±10%,	Ceramic	1	
C526	ECCD1H120K	12pF,	50WV,	±10%,	Ceramic	1	
C527	ECCD1H180K	18pF,	50WV,	±10%,	Ceramic	1	
C528	ECCD1H180K	18pF,	50WV,	±10%,	Ceramic	1	
C529	ECQM05123JZ	0.012μF,	50WV,	±5%,	Polyester	1	
C530	ECQM05123JZ	0.012μF,	50WV,	±5%,	Polyester	1	
C531	ECQM05823JZ	0.082μF,	50WV,	±5%,	Polyester	1	
C532	ECQM05823JZ	0.082μF,	50WV,	±5%,	Polyester	1	
C533	ECQM05123JZ	0.012μF,	50WV,	±5%,	Polyester	1	
C534	ECQM05123JZ	0.012μF,	50WV,	±5%,	Polyester	1	
C535	ECQM05823JZ	0.082μF,	50WV,	±5%,	Polyester	1	
C536	ECQM05823JZ	0.082μF,	50WV,	±5%,	Polyester	1	
C537	**ECEA50N1**	1μF,	50WV,	Non-Polar	Electrolytic	1	
C538	**ECEA50N1**	1μF,	50WV,	Non-Polar	Electrolytic	1	
C539	ECKD2H331KB	330pF,	500WV,	±10%,	Ceramic	1	
C540	ECKD2H331KB	330pF,	500WV,	±10%,	Ceramic	1	
C541	ECQM05152JZ	0.0015μF,	50WV,	±5%,	Polyester	1	
C542	ECQM05152JZ	0.0015μF,	50WV,	±5%,	Polyester	1	
C543	ECQM05473JZ	0.047μF,	50WV,	±5%,	Polyester	1	
C544	ECQM05473JZ	0.047μF,	50WV,	±5%,	Polyester	1	
C545	ECQM05393JZ	0.039μF,	50WV,	±5%,	Polyester	1	
C546	ECQM05393JZ	0.039μF,	50WV,	±5%,	Polyester	1	
C547	ECEA50MR68R	0.68μF,	50WV,		Electrolytic	1	
C548	ECEA50MR68R	0.68μF,	50WV,		Electrolytic	1	
C549	**ECEA50N1**	1μF,	50WV,	Non-Polar	Electrolytic	1	
C550	**ECEA50N1**	1μF,	50WV,	Non-Polar	Electrolytic	1	
C561	ECCD1H330K	33pF,	50WV,	±10%,	Ceramic	1	
C562	ECCD1H330K	33pF,	50WV,	±10%,	Ceramic	1	
C601	ECEA50M1R	1μF,	50WV,		Electrolytic	1	
C602	ECEA50M1R	1μF,	50WV,		Electrolytic	1	
C603	ECKD2H221KB	220pF,	500WV,	±10%,	Ceramic	1	
C604	ECKD2H221KB	220pF,	500WV,	±10%,	Ceramic	1	
C605	ECCD2H070D	7pF,	50WV,	±0.5pF,	Ceramic	1	
C606	ECCD2H070D	7pF,	50WV,	±0.5pF,	Ceramic	1	
C609	ECQM05473KZ	0.047μF,	50WV,	±10%,	Polyester	1	
C610	ECQM05473KZ	0.047μF,	50WV,	±10%,	Polyester	1	
C611	ECCD2H270K	27pF,	500WV,	±10%,	Ceramic	1	
C612	ECCD2H270K	27pF,	500WV,	±10%,	Ceramic	1	
C613	ECKD2H331KB	330pF,	500WV,	±10%,	Ceramic	1	

Ref. No.	Part No.	Part Name & Description	Per Set	Remarks
C614	ECKD2H331KB	330pF, 500WV, ±10%, Ceramic	1	
C615	ECKD1H102KB	0.001μF, 50WV, ±10%, Ceramic	1	
C616	ECKD1H102KB	0.001μF, 50WV, ±10%, Ceramic	1	
C617	ECQM05183KZ	0.018μF, 50WV, ±10%, Polyester	1	
C618	ECQM05183KZ	0.018μF, 50WV, ±10%, Polyester	1	
C619	ECKD2H331KB	330pF, 500WV, ±10%, Ceramic	1	
C620	ECKD2H331KB	330pF, 500WV, ±10%, Ceramic	1	
C621	ECQM05183KZ	0.018μF, 50WV, ±10%, Polyester	1	
C622	ECQM05183KZ	0.018μF, 50WV, ±10%, Polyester	1	
C623	ECCD2H270K	27pF, 500WV, ±10%, Ceramic	1	
C624	ECCD2H270K	27pF, 500WV, ±10%, Ceramic	1	
C625	ECCD2H270K	27pF, 500WV, ±10%, Ceramic	1	
C626	ECCD2H270K	27pF, 500WV, ±10%, Ceramic	1	
C627	ECQM1473KZ	0.047μF, 125WV, ±10%, Polyester	1	
C628	ECQM1473KZ	0.047μF, 125WV, ±10%, Polyester	1	
C629	**ECEA25V33V**	33μF, 25WV, Electrolytic	1	
C630	**ECEA25V33V**	33μF, 25WV, Electrolytic	1	
C631	**ECEA100V100V**	100μF, 100WV, Electrolytic	1	
C632	**ECEA100V47V**	47μF, 100WV, Electrolytic	1	
C633	ECQM05392JZ	0.0039μF, 50WV, ±5%, Polyester	1	
C634	ECQM05392JZ	0.0039μF, 50WV, ±5%, Polyester	1	
C701	ECQM2104KZ	0.1μF, 500WV, ±10%, Polyester	1	
C702	ECEM80R223Z	22000μF, 80WV, Electrolytic	1	○
C703	ECEM80R223Z	22000μF, 80WV, Electrolytic	1	○
C704	ECEA63V470V	470μF, 63WV, Electrolytic	1	
C705	ECEA63V470V	470μF, 63WV, Electrolytic	1	
C706	**ECEA63V47V**	47μF, 63WV, Electrolytic	1	
C707	**ECEA63V47V**	47μF, 63WV, Electrolytic	1	
C708	**ECEA50V47V**	47μF, 50WV, Electrolytic	1	
C709	**ECEA50V47V**	47μF, 50WV, Electrolytic	1	
C710	**ECEA25V220V**	220μF, 25WV, Electrolytic	1	
C711	**ECEA16V33V**	33μF, 16WV, Electrolytic	1	
C712	**ECEA16V470V**	470μF, 16WV, Electrolytic	1	
C713	**ECEA50V220V**	220μF, 50WV, Electrolytic	1	
C714	**ECEA50V220V**	220μF, 50WV, Electrolytic	1	
C715	ECKD1H103PF	0.01μF, 50WV, +100 −0 %, Ceramic	1	
C716	ECKD1H103PF	0.01μF, 50WV, +100 −0 %, Ceramic	1	
C717	**ECEA16N220V**	220μF, 16WV, Non Polar Electrolytic	1	
C718	**ECEA10V100V**	100μF, 10WV, Non Polar	1	
C719	**ECEA10V100V**	100μF, 10WV, Electrolytic	1	
C720	**ECEA25V220V**	220μF, 25WV Electrolytic	1	
C721	**ECEA25V220V**	220μF, 25WV, Electrolytic	1	
C722	**ECEA25V100V**	100μF, 25WV, Electrolytic	1	
C723	**ECEA16V220V**	220μF, 16WV, Electrolytic	1	
C724	**ECEA35V100V**	100μF, 35WV, Electrolytic	1	
C725	**ECEA50V100V**	100μF, 50WV, Electrolytic	1	
C726	**ECEA50V100V**	100μF, 50WV, Electrolytic	1	
C727	ECKD2H103PF	0.01μF, 500WV, +100 −0 %, Ceramic	1	
C728	ECKD2H103PF	0.01μF, 500WV, +100 −0 %, Ceramic	1	
C729	ECKD2H103PF	0.01μF, 500WV, +100 −0 %, Ceramic	1	
C730	ECKD2H103PF	0.01μF, 500WV, +100 −0 %, Ceramic	1	
C731	ECKD1H103PF	0.01μF 50WV, +100 −0 %, Ceramic	1	
C732	ECKD1H103PF	0.01μF 50WV, +100 −0 %, Ceramic	1	
C733	**ECEA35V220V**	220μF, 35WV, Electrolytic	1	
C740	ECKD1H103PF	0.01μF, 50WV, +100 −0 %, Ceramic	1	
C801	ECQM1473M	0.047μF, 125WV, ±20%, Polyester	1	
C802	ECQM1473M	0.047μF, 125WV, ±20%, Polyester	1	

Ref. No.	Part No.	Part Name & Description	Per Set	Remarks
VARIABLE CAPACITORS				
CV1~CV6 (CT1~CT6)	ECV6MX34X15G	Tuning Gang, FM and AM (with trimmer)	1	
COMPONENT COMBINATIONS				
Z101	EXA5DL04C	FM Detector Circuit	1	
Z703, 704	RXAF103P22HD	0.01μF (X2), Rectifier Circuit	2	
LAMPS				
PL1, 2, 3	XAMR54T	Dial Lamp, (12.6V 0.38A)	3	
PL4	XAMR38S200B	Lamp, Stereo Indicator (6.3V 40mA)	1	
FUSES				
F1	XBA2E100N55	10A Fuse, Primary	1	
F2	XBA1K20NU5	2A Fuse, Dial Lamp	1	
F3, 4	XBA1K10NU5	1A Fuse, Secondary	2	
F5	XBA2E50NS5	5A Fuse, Primary	1	
SWITCHES				
S101, 102, 503, 504, 505	SSH511S	Push Switch, Delay Time, Muting Mode, AF Muting & Loudness	1	○
S201	SSR63	Selector Switch, Phono Inpedance	1	○
S501	SSR61	Selector Switch, Input	1	○
S502	SSR59	Selector Switch, Tape Monitor	1	○
S506, 507, 508,	SSH319S	Push Switch, Turnover & Tone Defeat	1	○
S509, 510	SSH227S	Push Switch, High & Low Filter	1	○
S1001	SSHA5760X-1	Push Switch, Power (with Button)	1	○
S1002	SSH223S	Push Switch, Speakers	1	
S1003	SSR63S	Voltage Selector Switch	1	
RELAYS				
RLY101	SSY9	Relay, Muting	1	
RLY601	SSY15	Relay, Speaker Protection	1	○
METERS				
	SSM77	Meter, Signal	1	
	SSM79	Meter, Tuning	1	
CABINET and CHASSIS PARTS				
1	XTS3+8CFZ	Screw, Panal M'tg	2	
2	XTB3+8BFZ	Screw, Panel, Dial Light Plate & Bottom Board M'tg	22	
3	SYW29	Panel, Front	1	○
4	SGX6461	Sleeve, Push Switch Buttons	3-2/3	○
5	SGX6455	Sleeve, Push Switch Buttons	1	
6	SGX6457	Ornament, Front Panel	2	○
7	SGU17	Glass Plate, Front Panel	1	○
8	SBN593	Knob, Bass, Treble Balance, Tape Monitor, Selector & Inpedance Switch	6	○
9	SBN585-1	Knob, Volume	1	○
10	SBN591	Knob, Tuning	1	○
11	SBC149	Button, Push Switches	12	
12	SHGA703	Rubber Bushing, Push Switch Buttons	10	

■ LOCATION OF CABINET & CHASSIS PARTS

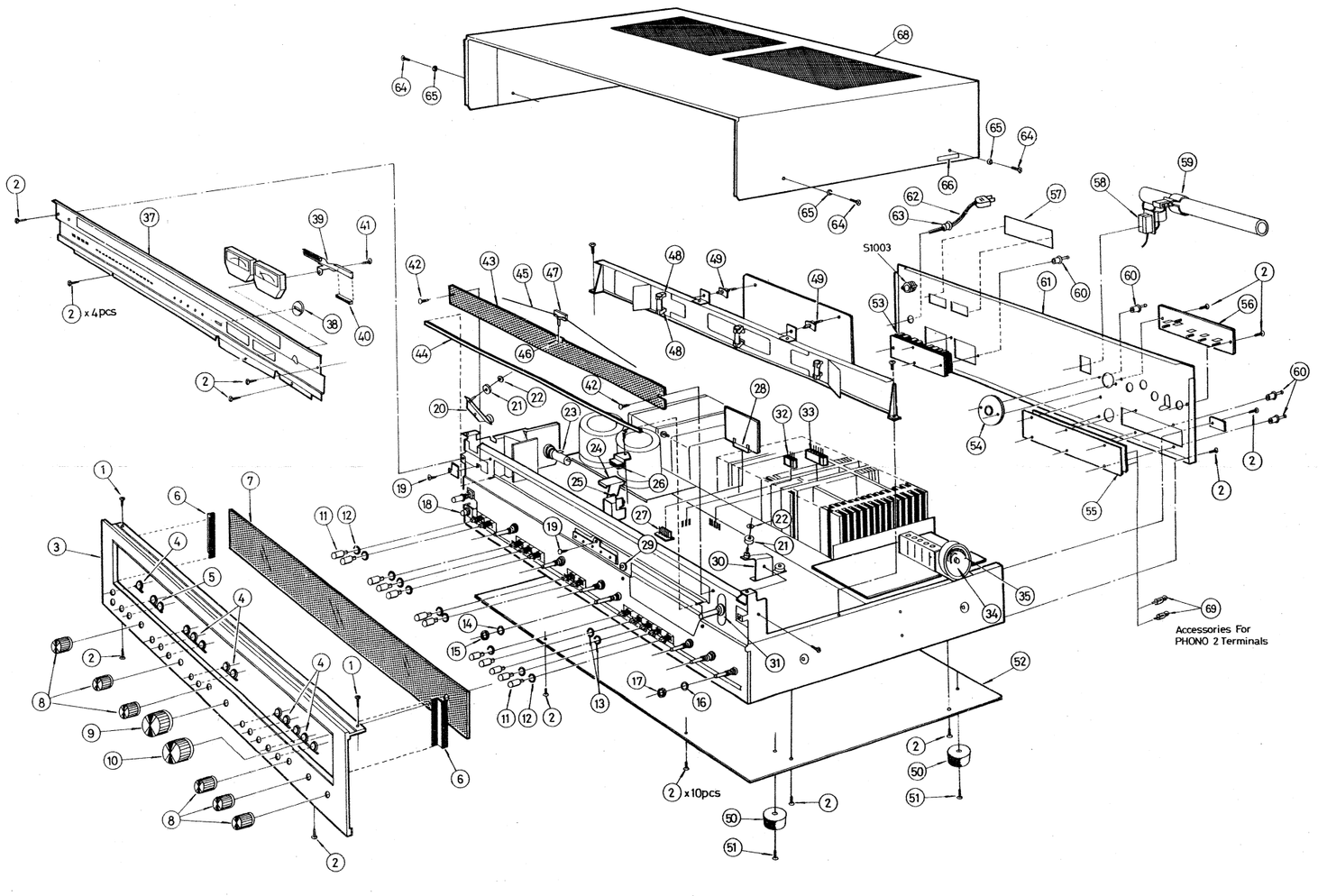

■ LOCATION OF CABINET & CHASSIS PARTS

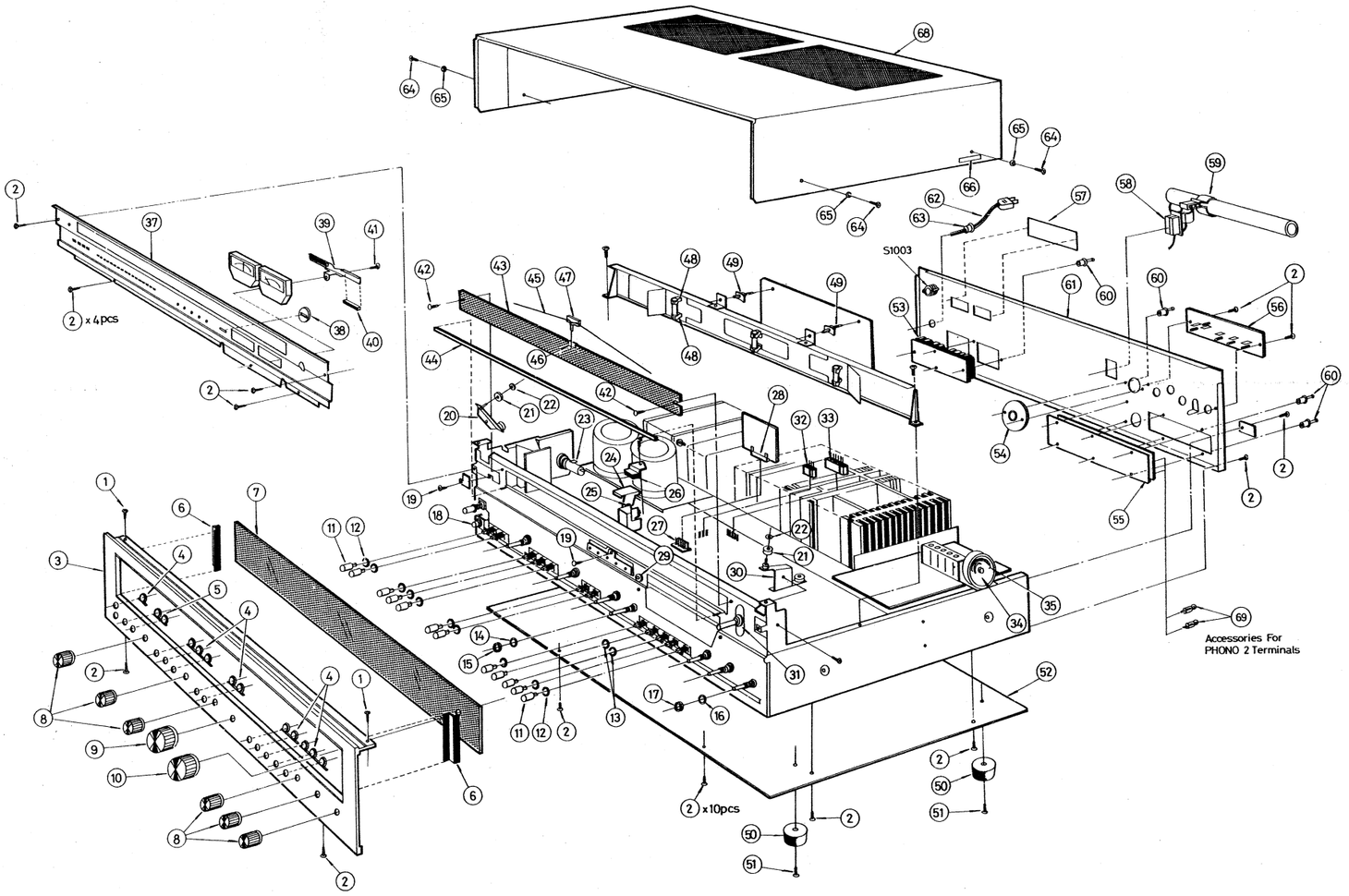

Ref. No.	Part No.	Part Name & Description	Per Set	Remarks
13	SHG1339	Rubber Bushing, Push Switch Buttons	2	
14	XWV8	Spring Washer, Bass, Treble & Volume	3	
15	XNS8	Nut, Bass, Treble & Volume M'tg	3	
16	XWV7	Spring Washer, Balance, Tape Monitor, Selector & Inpedance Switch	4	
17	XNS7	Nut, Balance, Tape Monitor, Selector & Phono Inpedance Switch M'tg	4	
18	XCJ6N11B-A	Jack, Headphones	1	
19	SHRA919	Clip, Indicator P. C. B. M'tg	2	
20	SXE721	Shaft, Dial Pulley Ass'y	1	O
21	RDR20	Pulley, Dial Cord	4	
22	RNW150-2	Lock Washer, Pulley	4	
23	**QTF1046**	Holder, Fuse	1	
24	SBM9007	Metal Clamp, Relay M'tg	1	O
25	SBM33	Magnet	2	O
26	SHG1349	Rubber Cushion, Relay	1	
27	SJT331	Pin Clamp, Protection P. C. B.	1	O
28	SJS6601	Socket, P. C. B. Connector	5	
29	SHGA204	Rubber Bracket, Stereo Indicator	1	
30	SXE719	Shaft, Dial Pulley Ass'y	1	O
31	SDT8009-1	Shaft, Tuning	1	O
	SDX753S	Flywheel, Tuning	1	
	XXAS3K5S	Screw, Flywheel M'tg	2	
32	SJS5307	Socket, 3 pcs. Lead Wire	4	
33	SJS5505	Socket, 5 pcs. Lead Wire	4	
	SJS5603	Socket, 6 pcs. Lead Wire	1	
34	SDD47-1	Drum, Dial Cord	1	
35	SDS4121	Spring, Dial Cord	1	
37	SDH329-1	Plate, Dial Light & Meter M'tg	1	O
38	SGL51	Orange Filter, Stereo Indicator	1	
39	SMMA10-2	Bracket, Meter	1	
40	RHG109	Rubber Cushion, Meter	2	
41	XTV3+6C	Screw, Meter Bracket M'tg	1	
42	SHRA916-1	Clip, Dial Scale M'tg	2	
43	SKD2610	Scale, Dial	1	O
44	SUM11	Bracket, Dial Scale	1	O
45	SDZ051-1	Cord, Dial 90-5/8" (230cm)	1roll	
46	SHPA4	Paper, Dial Pointer Slide	1	
47	SDP1099	Pointer, Dial	1	O
48	RJF107-2	Holder, Dial Lamp	6	
49	SHRA2	Spacer, Drive Amplifier P.C.B. M'tg	2	
50	SKX219-1	Foot, Bottom Board	4	
51	XTV3+16C	Screw, Foot M'tg	4	
52	SKU5810-1	Bottom Board	1	O
53	SJF5801	Terminal, Speakers	1	
54	**SJF3101**	Terminal, 4ch. MPX Output	1	
55	SJF3017	Terminal, Input & Tape Deck	1	O
56	SJF4503	Terminal, Antenna	1	O
57	SGP9017	Cover plate,AC Outlet Hole	1	O
58	SMA207	Holder, AM Antenna Coil	1	
59	SMA205	Holder, AM Antenna Coil	1	
60	SHR401-1	Clip, Terminal & P. C. B. M'tg	12	
61	SGP350-1C	Rear Panel	1	O
62	SAA4	Antenna	1	
63	SHRA108	Bushing, AC Cord	1	
64	XTB4+12FFZ	Screw, Cabinet M'tg	4	
65	XWG5FZ	Washer, Cabinet Screw	4	
66	SQXA4112	Label, Caution	1	
68[X]	SKA8290W	Cabinet, Simulated Brown Wood, Set for [X]	1	O
68[XGH]	SKA8291W	Cabinet, Simulated Black Wood,Set for[XGH]	1	O
69	SJPA11	Short Pin, PHONO 2 Terminal Accessory	2	
	SJS6501	DIN Socket, Tape Monitor	1	

Ref. No.	Part No.	Part Name & Description	Per Set	Remarks
ACCESSORIES				
A1	SSA251	FM Feeder Antenna	1	
A2	RJP5	Pin Plug	4	
A3 [X]	RJP74-1	AC plug, only Set for [X]	1	
A4 [X]	RJP75	AC plug, only Set for [X]	1	
PACKING PARTS				
P1	SPP491	Soft Cover	1	O
P2	SPHA6008	Polyethylene Sheet, Set	1	
P3 [X]	SPS541	Pad, Left & Right Side, Set for [X]	2	O
P3 [XGH]	SPS523	Pad, Left & Right Side, Set for [XGH]	2	
P4	SPS411	Pad, Right Side	1	O
P5	SPS409	Pad, Left Side	1	O
P6 [X]	SPN5185	Carton Box, Inner, Set for [X]	1	O
P6 [XGH]	SPG765	Carton Box, Inner, Set for [XGH]	1	O
P7 [X]	SPG763	Carton Box, Outer, Set for [X]	1	O
P7 [XGH]	SPG857	Carton Box, Outer, Set for [XGH]	1	O
P8	SQF1365	Printed Matter	1	O
P9 [X]	SPS691	Pad, Carton Box, Set for [X]	2	O
P9 [XGH]	SPS693	Pad, Carton Box, Set for [XGH]	2	O
P10 [X]	SPS543	Pad, Bottom Side, Set for [X]	1	O
P10 [XGH]	SPS547	Pad, Bottom Side, Set for [XGH]	1	O
P11 [X]	SPS545	Pad, Top Side, Only Set for [X]	1	O

Notes: Set for [X] are European, Asia, Latin America, Oceania, Middle East and Africa.
Set for [XGH] is Holland.

■ PACKINGS

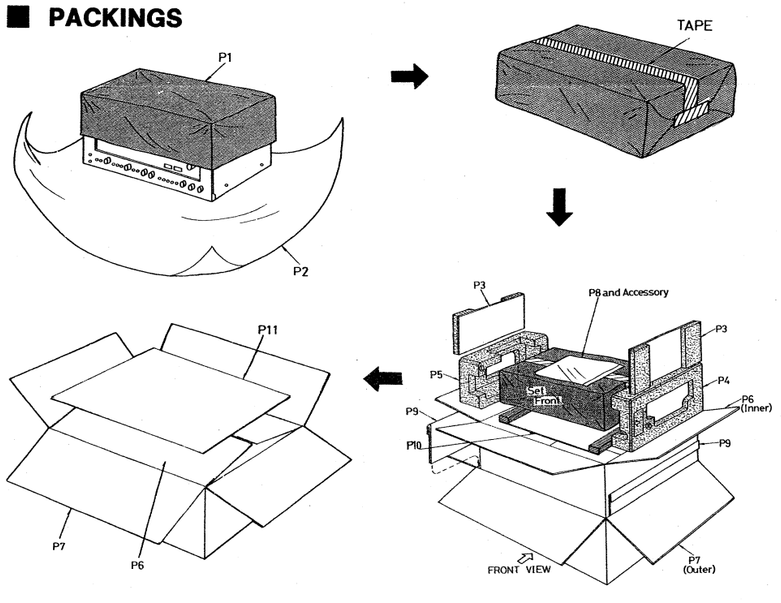

Printed in Japan
7608-2000 Ⓚ

Ref. No.	Part No.	Part Name & Description	Per Set		Remarks
R5	**ERD25TJ221**	220Ω, 1/4W, ±5%, Carbon	1		
R6	**ERD25TJ821**	820Ω, 1/4W, ±5%, Carbon	1		
R7	**ERD25TJ101**	100Ω, 1/4W, ±5%, Carbon	1		
R8	**ERD25TJ221**	220Ω, 1/4W, ±5%, Carobn	1		
R9	**ERD25TJ123**	12kΩ, 1/4W, ±5%, Carbon	1		
R10	**ERD25TJ273**	27kΩ, 1/4W, ±5%, Carbon	1		
R11	**ERD25TJ152**	1.5k , 1/4W, ±5%, Carbon	1		
R12	**ERD25TJ681**	680Ω, 1/4W, ±5%, Carbon	1		
R13	**ERD25TJ101**	100Ω, 1/4W, ±5%, Carbon	1		
R14	**ERD25TJ682**	6.8kΩ, 1/4W, ±5%, Carbon	1		
R15	**ERD25TJ471**	470Ω, 1/4W, ±5%, Carbon	1		
R16	**ERD25TJ563**	56kΩ, 1/4W, ±5%, Carbon	1		
R17	**ERD25TJ221**	220Ω, 1/4W, ±5%, Carbon	1		
R18	**ERD25TJ821**	820Ω, 1/4W, ±5%, Carbon	1		
R19	**ERD25TJ103**	10kΩ, 1/4W, ±5%, Carbon	1		
R20	**ERD25TJ331**	330Ω, 1/4W, ±5%, Carbon	1		
R21	**ERD25TJ103**	10kΩ, 1/4W, ±5%, Carbon	1		
R22	**ERD25TJ272**	2.7kΩ, 1/4W, ±5%, Carbon	1		
R23	**ERD25TJ272**	2.7kΩ, 1/4W, ±5%, Carbon	1		
R24	**ERD25TJ102**	10kΩ, 1/4W, ±5%, Carbon	1		
R25	**ERD25TJ103**	10kΩ, 1/4W, ±5%, Carbon	1		
R26	**ERD25TJ102**	1kΩ, 1/4W, ±5%, Carbon	1		
R27	**ERD25TJ273**	27kΩ, 1/4W, ±5%, Carbon	1		
R102	**ERD25TJ331**	330Ω, 1/4W, ±5%, Carbon	1		
R103	**ERD25TJ272**	2.7kΩ, 1/4W, ±5%, Carbon	1		
R104	**ERD25TJ101**	100Ω, 1/4W, ±5%, Carbon	1		
R105	**ERD25TJ221**	220Ω, 1/4W, ±5%, Carbon	1		
R106	**ERD25TJ471**	470Ω, 1/4W, ±5%, Carbon	1		
R107	**ERD25TJ221**	220Ω, 1/4W, ±5%, Carbon	1		
R108	**ERD25TJ471**	470Ω, 1/4W, ±5%, Carbon	1		
R109	**ERD25TJ221**	220Ω, 1/4W, ±5%, Carbon	1		
R110	**ERD25TJ471**	470Ω, 1/4W, ±5%, Carbon	1		
R111	**ERD25TJ221**	220Ω, 1/4W, ±5%, Carbon	1		
R112	**ERD25TJ182**	1.8kΩ, 1/4W, ±5%, Carbon	1		
R113	**ERD25TJ151**	150Ω, 1/4W, ±5%, Carbon	1		
R114	**ERD25TJ103**	10kΩ, 1/4W, ±5%, Carbon	1		
R115	**ERD25TJ101**	100Ω, 1/4W, ±5%, Carbon	1		
R116	**ERD25TJ221**	220Ω, 1/4W, ±5%, Carbon	1		
R117	**ERD25TJ223**	22kΩ, 1/4W, ±5%, Carbon	1		
R118	**ERD25TJ102**	1kΩ, 1/4W, ±5%, Carbon	1		
R119	**ERD25TJ102**	1kΩ, 1/4W, ±5%, Carbon	1		
R120	**ERD25TJ331**	330Ω, 1/4W, ±5%, Carbon	1		
R121	**ERD25TJ223**	22kΩ, 1/4W, ±5%, Carbon	1		
R122	**ERD25TJ331**	330Ω, 1/4W, ±5%, Carbon	1		
R123	**ERD25TJ822**	8.2kΩ, 1/4W, ±5%, Carbon	1		
R124	**ERD25TJ563**	56kΩ, 1/4W, ±5%, Carbon	1		
R125	**ERD25TJ221**	220Ω, 1/4W, ±5%, Carbon	1		
R126	**ERD25TJ152**	1.5kΩ, 1/4W, ±5%, Carbon	1		
R127	**ERD25TJ103**	10kΩ, 1/4W, ±5%, Carbon	1		
R128	**ERD25TJ153**	15kΩ, 1/4W, ±5%, Carbon	1		
R129	**ERD25TJ152**	1.5kΩ, 1/4W, ±5%, Carbon	1		
R130	**ERD25TJ471**	470Ω, 1/4W, ±5%, Carbon	1		
R131	**ERD25TJ101**	100Ω, 1/4W, ±5%, Carbon	1		
R132	**ERD25TJ471**	470Ω, 1/4W, ±5%, Carbon	1		
R133	**ERD25TJ332**	3.3kΩ, 1/4W, ±5%, Carbon	1		
R134	**ERD25TJ331**	330Ω, 1/4W, ±5%, Carbon	1		
R135	**ERD25TJ101**	100Ω, 1/4W, ±5%, Carbon	1		
R136	**ERD25TJ101**	100Ω, 1/4W, ±5%, Carbon	1		
R137	**ERD25TJ102**	1kΩ, 1/4W, ±5%, Carbon	1		
R138	**ERD25TJ272**	2.7kΩ, 1/4W, ±5%, Carbon	1		
R139	**ERD25TJ103**	10kΩ, 1/4W, ±5%, Carbon	1		

Ref. No.	Part No.	Part Name & Description	Per Set		Remarks
R140	**ERD25TJ182**	1.8kΩ, 1/4W, ±5%, Carbon	1		
R141	**ERD25TJ101**	100Ω, 1/4W, ±5%, Carbon	1		
R142	**ERD25TJ221**	220Ω, 1/4W, ±5%, Carbon	1		
R143	**ERD25TJ472**	4.7kΩ, 1/4W, ±5%, Carbon	1		
R144	**ERD25TJ682**	6.8kΩ, 1/4W, ±5%, Carbon	1		
R145	**ERD25TJ563**	56kΩ, 1/4W, ±5%, Carbon	1		
R146	**ERD25TJ473**	47kΩ, 1/4W, ±5%, Carbon	1		
R147	**ERD25TJ820**	82Ω, 1/4W, ±5%, Carbon	1		
R148	**ERD25TJ472**	4.7kΩ, 1/4W, ±5%, Carbon	1		
R149	**ERD25TJ681**	680Ω, 1/4W, ±5%, Carbon	1		
R150	**ERD25TJ563**	56kΩ, 1/4W, ±5%, Carbon	1		
R151	**ERD25TJ102**	1kΩ, 1/4W, ±5%, Carbon	1		
R152	**ERD25TJ331**	330Ω, 1/4W, ±5%, Carbon	1		
R153	**ERD25TJ472**	4.7kΩ, 1/4W, ±5%, Carbon	1		
R154	**ERD25TJ472**	4.7kΩ, 1/4W, ±5%, Carbon	1		
R155	**ERD25TJ273**	27kΩ, 1/4W, ±5%, Carbon	1		
R156	**ERD25TJ273**	27kΩ, 1/4W, ±5%, Carbon	1		
R157	**ERD25TJ153**	15kΩ, 1/4W, ±5%, Carbon	1		
R158	**ERD25TJ102**	1kΩ, 1/4W, ±5%, Carbon	1		
R159	**ERD25TJ273**	27kΩ, 1/4W, ±5%, Carbon	1		
R160	**ERD25TJ153**	15kΩ, 1/4W, ±5%, Carbon	1		
R161	**ERD25TJ223**	22kΩ, 1/4W, ±5%, Carbon	1		
R162	**ERD25TJ221**	220Ω, 1/4W, ±5%, Carbon	1		
R163	**ERD25TJ392**	3.9kΩ, 1/4W, ±5%, Carbon	1		
R164	**ERD25TJ332**	3.3kΩ, 1/4W, ±5%, Carbon	1		
R165	**ERD25TJ562**	5.6kΩ, 1/4W, ±5%, Carbon	1		
R166	**ERD25TJ153**	15kΩ, 1/4W, ±5%, Carbon	1		
R167	**ERD50TJ221**	220Ω, 1/2W, ±5%, Carbon	1		
R171	**ERD25TJ471**	470Ω, 1/2W, ±5%, Carbon	1		
R172	**ERD25TJ274**	270kΩ, 1/4W, ±5%, Carbon	1		
R173	**ERD25TJ332**	3.3kΩ, 1/4W, ±5%, Carbon	1		
R174	**ERD25TJ332**	3.3kΩ, 1/4W, ±5%, Carbon	1		
R175	**ERD25TJ104**	100kΩ, 1/4W, ±5%, Carbon	1		
R176	**ERD25TJ104**	100kΩ, 1/4W, ±5%, Carbon	1		
R177	**ERD25TJ221**	220Ω, 1/4W, ±5%, Carbon	1		
R178	**ERD25TJ221**	220Ω, 1/4W, ±5%, Carbon	1		
R179	**ERD25TJ103**	10kΩ, 1/4W, ±5%, Carbon	1		
R180	**ERD25TJ103**	10kΩ, 1/4W, ±5%, Carbon	1		
R181	**ERD25TJ104**	100kΩ, 1/4W, ±5%, Carbon	1		
R182	**ERD25TJ104**	100kΩ, 1/4W, ±5%, Carbon	1		
R183	**ERD25TJ103**	10kΩ, 1/4W, ±5%, Carbon	1		
R184	**ERD25TJ103**	10kΩ, 1/4W, ±5%, Carbon	1		
R185	**ERD25TJ472**	4.7kΩ, 1/4W, ±5%, Carbon	1		
R186	**ERD25TJ472**	4.7kΩ, 1/4W, ±5%, Carbon	1		
R187	**ERD25TJ471**	470Ω, 1/4W, ±5%, Carbon	1		
R188	**ERD25TJ471**	470Ω, 1/4W, ±5%, Carbon	1		
R189	**ERD25TJ104**	100kΩ, 1/4W, ±5%, Carbon	1		
R190	**ERD25TJ104**	100kΩ, 1/4W, ±5%, Carbon	1		
R191	**ERD25TJ561**	560Ω, 1/4W, ±5%, Carbon	1		
R192	**ERD25TJ561**	560Ω, 1/4W, ±5%, Carbon	1		
R193	**ERD25TJ472**	4.7kΩ, 1/4W, ±5%, Carbon	1		
R201	**ERD14TSJ334**	330kΩ, 1/4W, ±5%, Carbon	1		
R202	**ERD14TSJ334**	330kΩ, 1/4W, ±5%, Carbon	1		
R203	**ERD25TJ331**	330Ω, 1/4W, ±5%, Carbon	1		
R204	**ERD25TJ331**	330Ω, 1/4W, ±5%, Carbon	1		
R205	**ERD25TJ333**	33kΩ, 1/4W, ±5%, Carbon	1		
R206	**ERD25TJ333**	33kΩ, 1/4W, ±5%, Carbon	1		
R207	**ERD25TJ823**	82kΩ, 1/4W, ±5%, Carbon	1		
R208	**ERD25TJ823**	82kΩ, 1/4W, ±5%, Carbon	1		
R209	**ERD25TJ564**	560kΩ, 1/4W, ±5%, Carbon	1		

Ref. No.	Part No.	Part Name & Description	Per Set	Remarks
R210	**ERD25TJ564**	560kΩ, 1/4W, ±5%, Carbon	1	
R211	**ERD14TSJ224**	220kΩ, 1/4W, ±5%, Carbon	1	
R212	**ERD14TSJ224**	220kΩ, 1/4W, ±5%, Carbon	1	
R213	**ERD25TJ182**	1.8kΩ, 1/4W, ±5%, Carbon	1	
R214	**ERD25TJ182**	1.8kΩ, 1/4W, ±5%, Carbon	1	
R215	**ERD14TSJ104**	100kΩ, 1/4W, ±5%, Carbon	1	
R216	**ERD14TSJ104**	100kΩ, 1/4W, ±5%, Carbon	1	
R217	**ERD25TJ561**	560Ω, 1/4W, ±5%, Carbon	1	
R218	**ERD25TJ561**	560Ω, 1/4W, ±5%, Carbon	1	
R219	**ERD14TSJ104**	100kΩ, 1/4W, ±5%, Carbon	1	
R220	**ERD14TSJ104**	100kΩ, 1/4W, ±5%, Carbon	1	
R221	**ERD25TJ561**	560Ω, 1/4W, ±5%, Carbon	1	
R222	**ERD25TJ561**	560Ω, 1/4W, ±5%, Carbon	1	
R223	ERO50CKF1502	15kΩ, 1/2W, ±1%, Metallic	1	
R224	ERO50CKF1502	15kΩ, 1/2W, ±1%, Metallic	1	
R225	**ERD25TJ221**	220Ω, 1/4W, ±5%, Carbon	1	
R226	**ERD25TJ221**	220Ω, 1/4W, ±5%, Carbon	1	
R227	ERO50CKF1913	191kΩ, 1/2W, ±1%, Metallic	1	○
R228	ERO50CKF1913	191kΩ, 1/2W ±1%, Metallic	1	○
R229	**ERD25TJ152**	1.5kΩ, 1/4W, ±5%, Carbon	1	
R230	**ERD25TJ152**	1.5kΩ, 1/4W, ±5%, Carbon	1	
R231	**ERD25TJ561**	560Ω, 1/4W, ±5%, Carbon	1	
R232	**ERD25TJ561**	560Ω, 1/4W, ±5%, Carbon	1	
R233	**ERD25TJ332**	3.3kΩ, 1/4W, ±5%, Carbon	1	
R234	**ERD25TJ332**	3.3kΩ, 1/4W, ±5%, Carbon	1	
R235	**ERD25TJ472**	4.7kΩ, 1/4W, ±5%, Carbon	1	
R236	**ERD25TJ472**	4.7kΩ, 1/4W, ±5%, Carbon	1	
R237	**ERD25TJ473**	47kΩ, 1/4W, ±5%, Carbon	1	
R238	**ERD25TJ473**	47kΩ, 1/4W, ±5%, Carbon	1	
R239	**ERD14FJ221**	220Ω, 1/4W, ±5%, Carbon	1	
R240	**ERD14FJ221**	220Ω, 1/4W, ±5%, Carbon	1	
R241	**ERD14FJ221**	220Ω, 1/4W, ±5%, Carbon	1	
R242	**ERD14FJ221**	220Ω, 1/4W, ±5%, Carbon	1	
R243	**ERD25TJ471**	470Ω, 1/4W, ±5%, Carbon	1	
R244	**ERD25TJ471**	470Ω, 1/4W, ±5%, Carbon	1	
R245	**ERD25TJ224**	220kΩ, 1/4W, ±5%, Carbon	1	
R246	**ERD25TJ224**	220kΩ, 1/4W, ±5%, Carbon	1	
R247	**ERD25TJ681**	680Ω, 1/4W, ±5%, Carbon	1	
R248	**ERD25TJ681**	680Ω, 1/4W, ±5%, Carbon	1	
R251	**ERD25TJ104**	100kΩ, 1/4W, ±5%, Carbon	1	
R252	**ERD25TJ104**	100kΩ, 1/4W, ±5%, Carbon	1	
R253	**ERD25TJ474**	470kΩ, 1/4W, ±5%, Carbon	1	
R254	**ERD25TJ474**	470kΩ, 1/4W, ±5%, Carbon	1	
R255	**ERD25TJ472**	4.7kΩ, 1/4W, ±5%, Carbon	1	
R256	**ERD25TJ472**	4.7kΩ, 1/4W, ±5%, Carbon	1	
R257	**ERD25TJ472**	4.7kΩ, 1/4W, ±5%, Carbon	1	
R258	**ERD25T 472**	4.7kΩ, 1/4W, ±5%, Carbon	1	
R501	**ERD25TJ104**	100kΩ, 1/4W, ±5%, Carbon	1	
R502	**ERD25TJ104**	100kΩ, 1/4W, ±5%, Carbon	1	
R503	**ERD25TJ153**	15kΩ, 1/4W, ±5%, Carbon	1	
R504	**ERD25TJ153**	15kΩ, 1/4W, ±5%, Carbon	1	
R505	**ERD25TJ222**	2.2kΩ, 1/4W, ±5%, Carbon	1	
R506	**ERD25TJ222**	2.2kΩ, 1/4W, ±5%, Carbon	1	
R507	**ERD25TJ684**	680kΩ, 1/4W, ±5%, Carbon	1	
R508	**ERD25TJ684**	680kΩ, 1/4W, ±5%, Carbon	1	
R509	**ERD25TJ182**	1.8kΩ, 1/4W, ±5%, Carbon	1	
R510	**ERD25TJ182**	1.8kΩ, 1/4W, ±5%, Carbon	1	
R511	**ERD14TSJ334**	330kΩ, 1/4W, ±5%, Carbon	1	
R512	**ERD14TSJ334**	330kΩ, 1/4W, ±5%, Carbon	1	
R513	**ERD25TJ822**	8.2kΩ, 1/4W, ±5%, Carbon	1	
R514	**ERD25TJ822**	8.2kΩ, 1/4W, ±5%, Carbon	1	

Ref. No.	Part No.	Part Name & Description	Per Set	Remarks
R515	**ERD14TSJ104**	100kΩ, 1/4W, ±5%, Carbon	1	
R516	**ERD14TSJ104**	100kΩ, 1/4W, ±5%, Carbon	1	
R517	**ERD25TJ103**	10kΩ, 1/4W, ±5%, Carbon	1	
R518	**ERD25TJ103**	10kΩ, 1/4W, ±5%, Carbon	1	
R519	**ERD25TJ331**	330Ω, 1/4W, ±5%, Carbon	1	
R520	**ERD25TJ331**	330Ω, 1/4W, ±5%, Carbon	1	
R521	**ERD25TJ274**	270kΩ, 1/4W, ±5%, Carbon	1	
R522	**ERD25TJ274**	270kΩ, 1/4W, ±5%, Carbon	1	
R523	**ERD25TJ563**	56kΩ, 1/4W, ±5%, Carbon	1	
R524	**ERD25TJ563**	56kΩ, 1/4W, ±5%, Carbon	1	
R525	**ERD25TJ153**	15kΩ, 1/4W, ±5%, Carbon	1	
R526	**ERD25TJ153**	15kΩ, 1/4W, ±5%, Carbon	1	
R527	**ERD25TJ682**	6.8kΩ, 1/4W, ±5%, Carbon	1	
R528	**ERD25TJ682**	6.8kΩ, 1/4W, ±5%, Carbon	1	
R529	**ERD25TJ153**	15kΩ, 1/4W, ±5%, Carbon	1	
R530	**ERD25TJ153**	15kΩ, 1/4W, ±5%, Carbon	1	
R531	**ERD25TJ682**	6.8kΩ, 1/4W, ±5%, Carbon	1	
R532	**ERD25TJ682**	6.8kΩ, 1/4W, ±5%, Carbon	1	
R533	**ERD14FJ391**	390Ω, 1/4W, ±5%, Carbon	1	
R534	**ERD14FJ391**	390Ω, 1/4W, ±5%, Carbon	1	
R535	**ERD14FJ391**	390Ω, 1/4W, ±5%, Carbon	1	
R536	**ERD14FJ391**	390Ω, 1/4W, ±5%, Carbon	1	
R537	**ERD25TJ682**	6.8kΩ, 1/4W, ±5%, Carbon	1	
R538	**ERD25TJ682**	6.8kΩ, 1/4W, ±5%, Carbon	1	
R539	**ERD25TJ101**	100Ω, 1/4W, ±5%, Carbon	1	
R540	**ERD25TJ101**	100Ω, 1/4W, ±5%, Carbon	1	
R541	**ERD25TJ393**	39kΩ, 1/4W, ±5%, Carbon	1	
R542	**ERD25TJ393**	39kΩ, 1/4W, ±5%, Carbon	1	
R543	**ERD25TJ182**	1.8kΩ, 1/4W, ±5%, Carbon	1	
R544	**ERD25TJ182**	1.8kΩ, 1/4W, ±5%, Carbon	1	
R545	**ERD25TJ473**	47kΩ, 1/4W, ±5%, Carbon	1	
R546	**ERD25TJ473**	47kΩ, 1/4W, ±5%, Carbon	1	
R547	**ERD25TJ682**	6.8kΩ, 1/4W, ±5%, Carbon	1	
R548	**ERD25TJ682**	6.8kΩ, 1/4W, ±5%, Carbon	1	
R551	**ERD25TJ682**	6.8kΩ, 1/4W, ±5%, Carbon	1	
R552	**ERD25TJ682**	6.8kΩ, 1/4W, ±5%, Carbon	1	
R553	**ERD25TJ473**	47kΩ, 1/4W, ±5%, Carbon	1	
R554	**ERD25TJ473**	47kΩ, 1/4W, ±5%, Carbon	1	
R555	**ERD25TJ223**	22kΩ, 1/4W, ±5%, Carbon	1	
R556	**ERD25TJ223**	22kΩ, 1/4W, ±5%, Carbon	1	
R557	**ERD25TJ332**	3.3kΩ, 1/4W, ±5%, Carbon	1	
R558	**ERD25TJ332**	3.3kΩ, 1/4W, ±5%, Carbon	1	
R559	**ERD25TJ471**	470Ω, 1/4W, ±5%, Carbon	1	
R560	**ERD25TJ471**	470Ω, 1/4W, ±5%, Carbon	1	
R561	**ERD25TJ224**	220kΩ, 1/4W, ±5%, Carbon	1	
R562	**ERD25TJ224**	220kΩ, 1/4W, ±5%, Carbon	1	
R563	**ERD25TJ103**	10kΩ, 1/4W, ±5%, Carbon	1	
R564	**ERD25TJ103**	10kΩ, 1/4W, ±5%, Carbon	1	
R565	**ERD25TJ123**	12kΩ, 1/4W, ±5%, Carbon	1	
R566	**ERD25TJ123**	12kΩ, 1/4W, ±5%, Carbon	1	
R567	**ERD25TJ223**	22kΩ, 1/4W, ±5%, Carbon	1	
R568	**ERD25TJ223**	22kΩ, 1/4W, ±5%, Carbon	1	
R569	**ERD25TJ124**	120kΩ, 1/4W, ±5%, Carbon	1	
R570	**ERD25TJ124**	120kΩ, 1/4W, ±5%, Carbon	1	
R571	**ERD25TJ824**	820kΩ, 1/4W, ±5%, Carbon	1	
R572	**ERD25TJ824**	820kΩ, 1/4W, ±5%, Carbon	1	
R573	**ERD25TJ102**	1kΩ, 1/4W, ±5%, Carbon	1	
R574	**ERD25TJ102**	1kΩ, 1/4W, ±5%, Carbon	1	
R575	**ERD25TJ823**	82kΩ, 1/4W, ±5%, Carbon	1	
R576	**ERD25TJ823**	82kΩ, 1/4W, ±5%, Carbon	1	
R577	**ERD14TSJ334**	330kΩ, 1/4W, ±5%, Carbon	1	